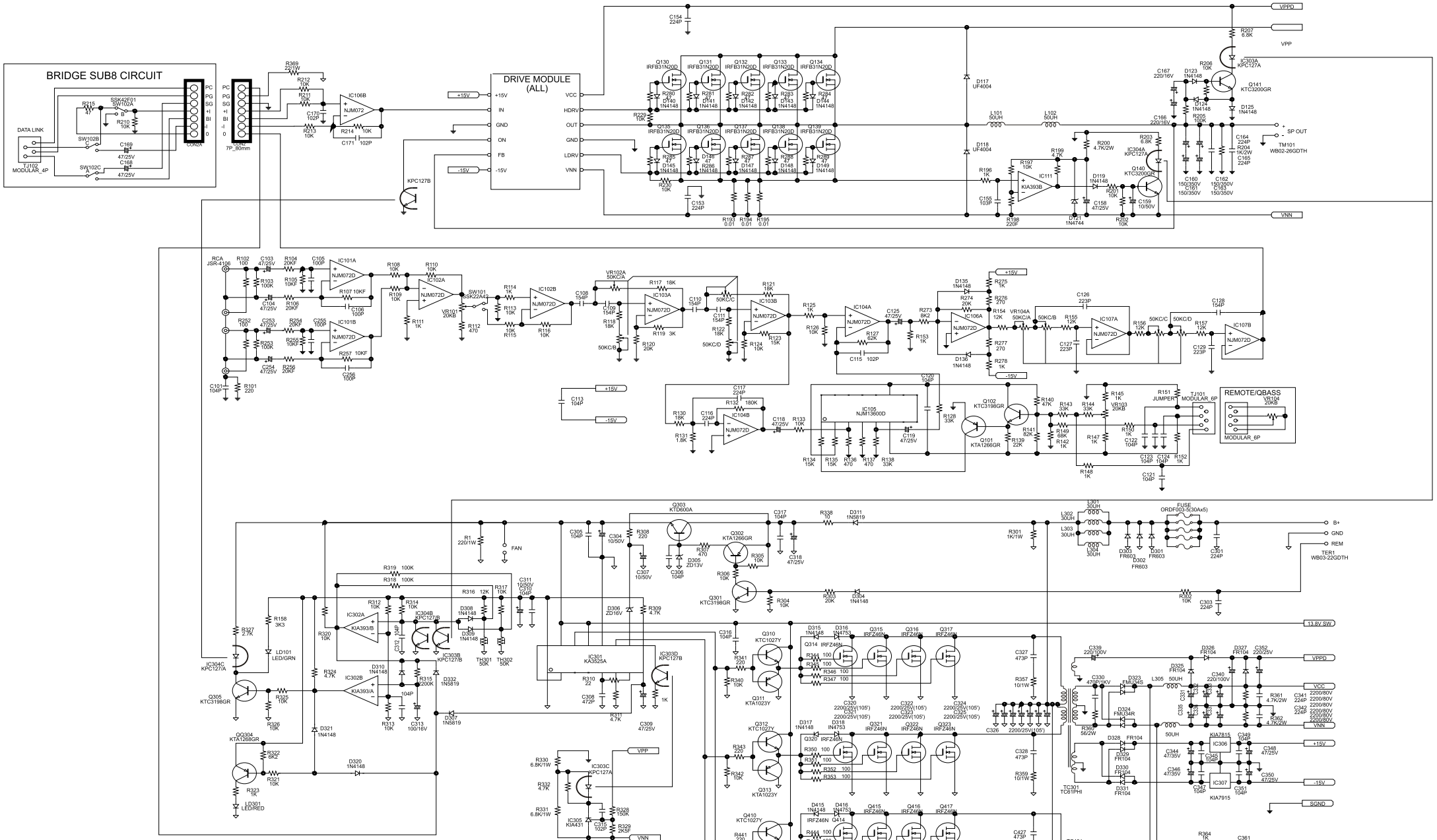

TITLE	SCHEMATIC DIAGRAM		
DATE	FEB.15.06	DESIGN	HWANG
FILE	VIBE 3100D	REV	A