circuit designer: Manoj T.M

AUD600 power supply Rev 3.0.1 simulation
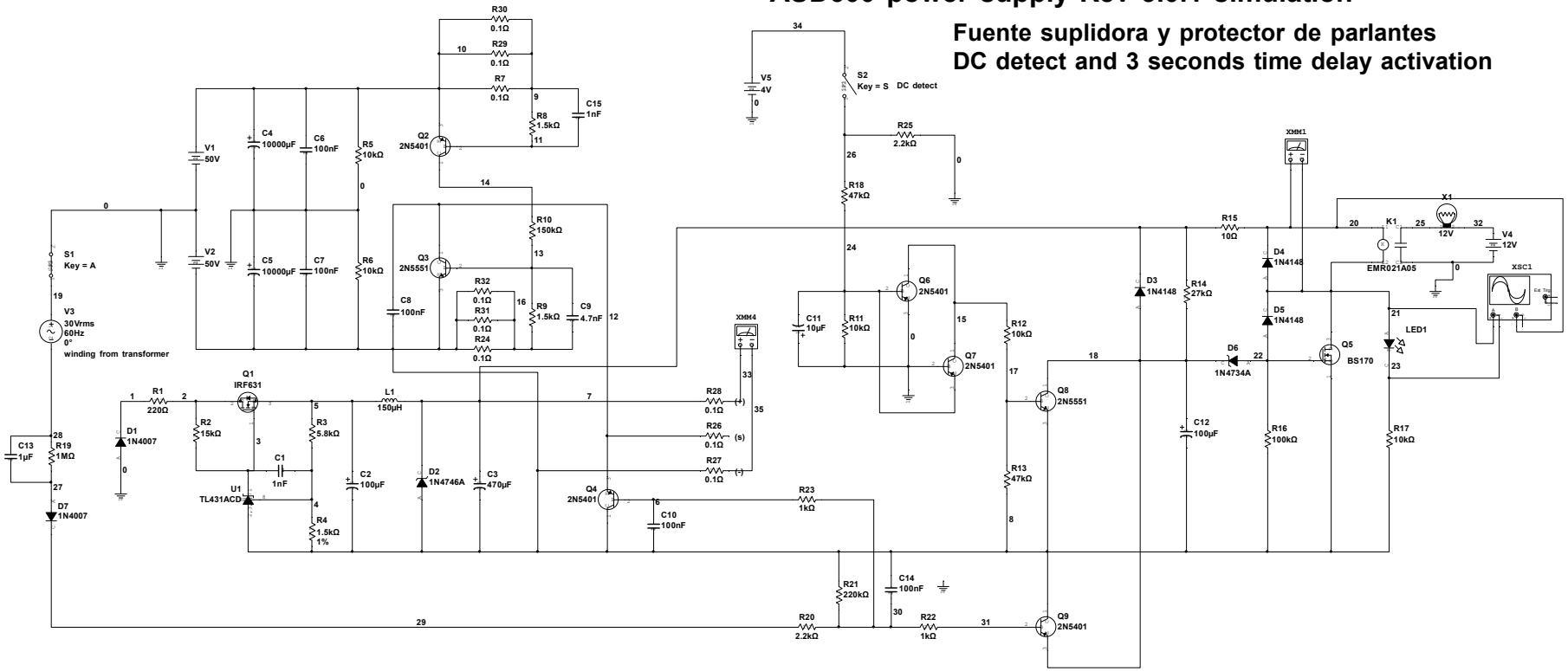
Fuente suplidora y protector de parlantes
DC detect and 3 seconds time delay activation