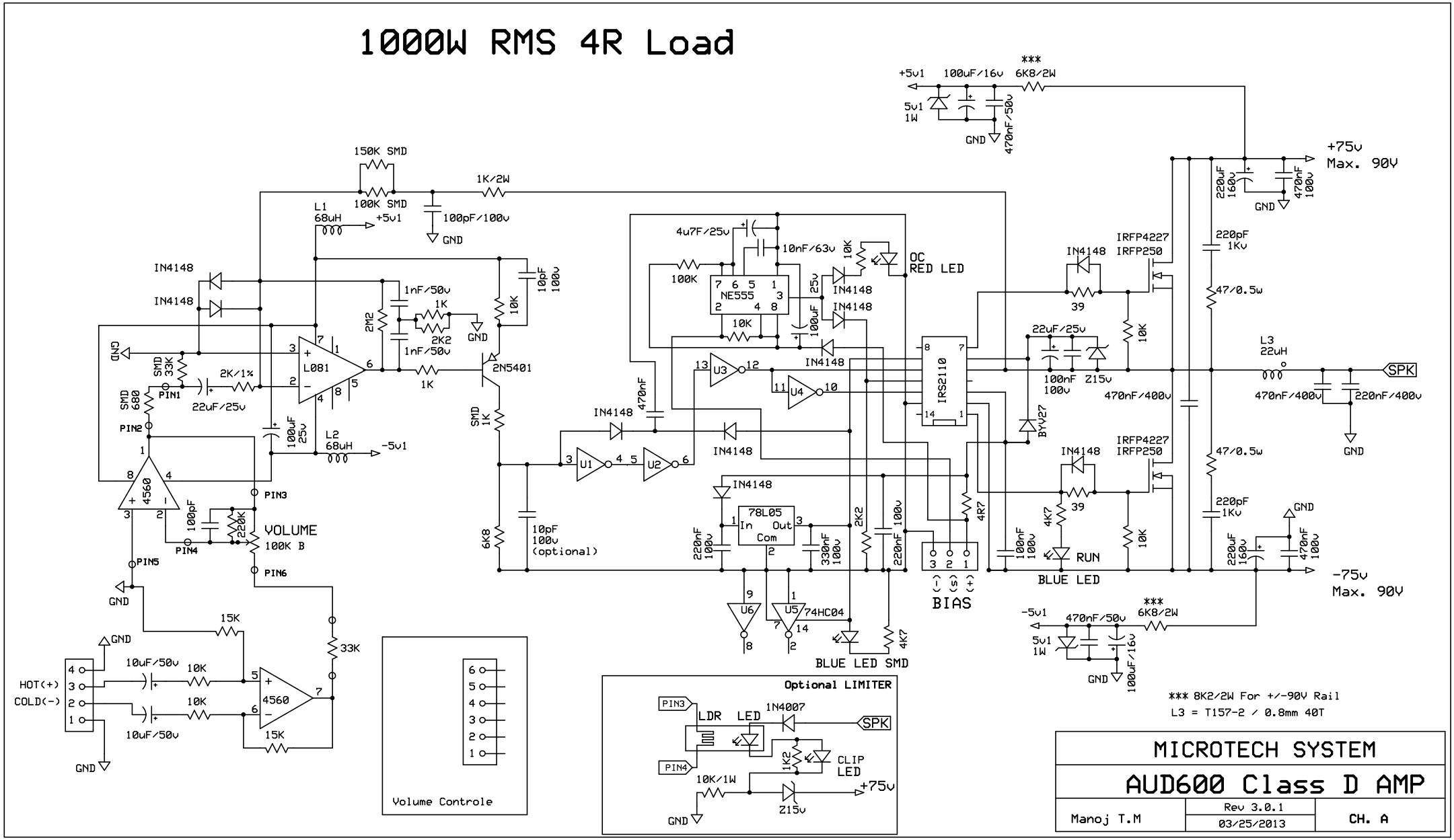1000W RMS 4R Load