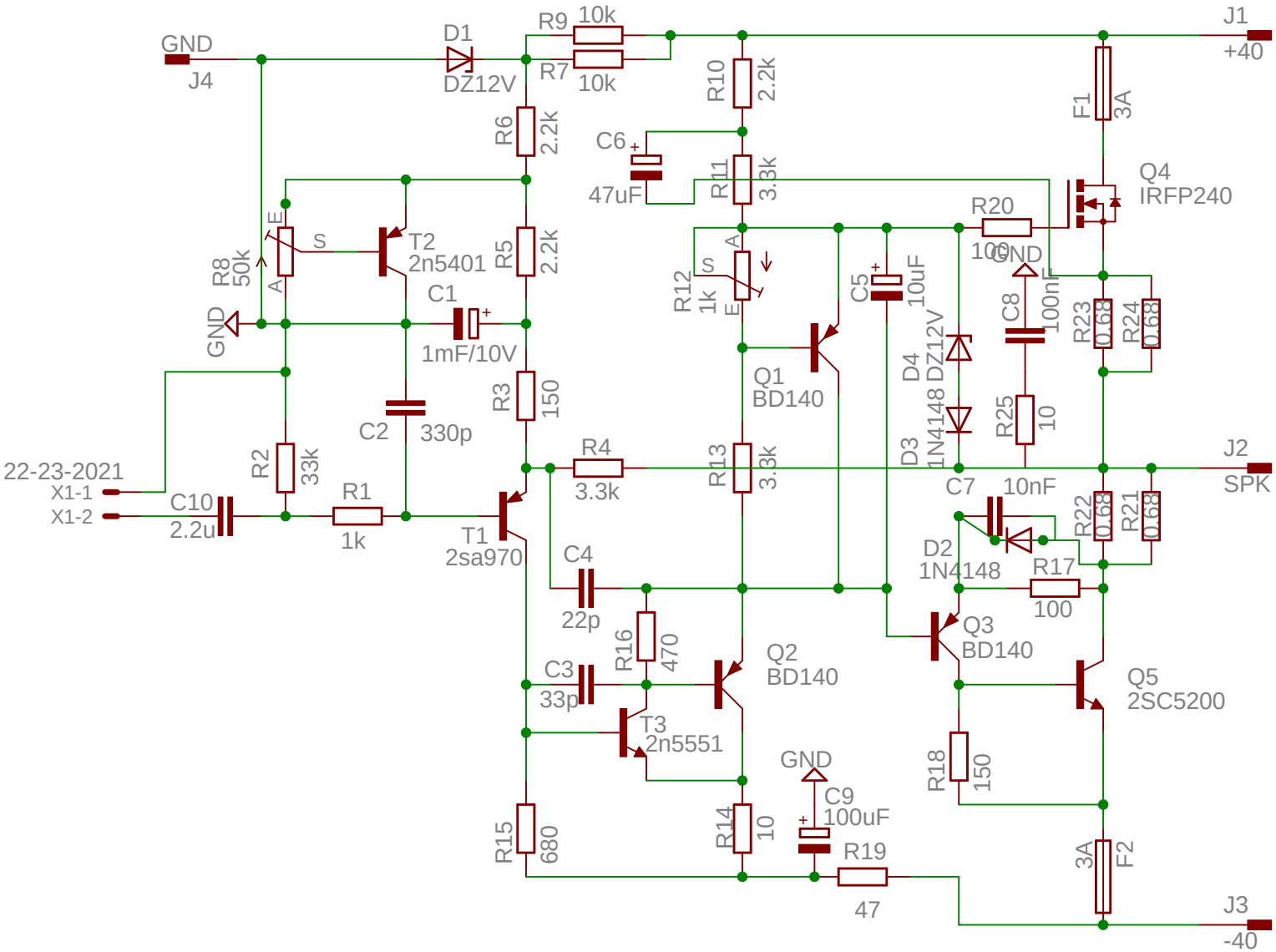

2014-08-11 20:57:55 f=1.50 C:\Users\ppp\Documents\eagle\B-Mos\B-Mos\B-mos.sch (Sheet: 1/1)