Assembly

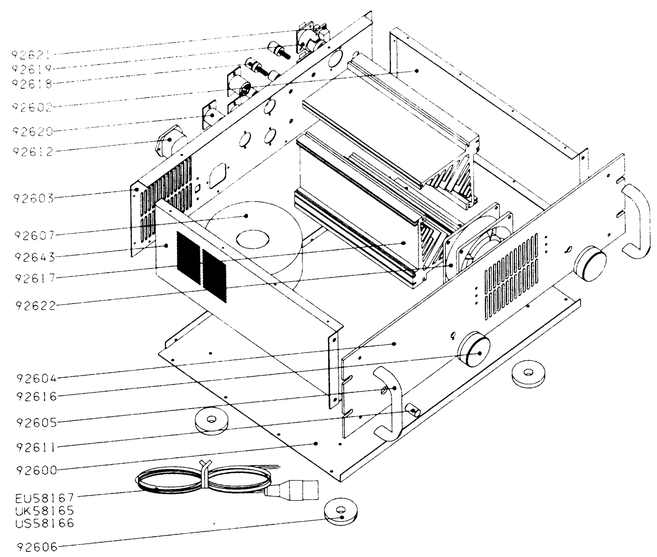

PCS.	COMPONENTS	ORDER NO
1	Bottom plate	92600
1	Top plate	92601
1	Side panel, right	92602
1	Side panel, left	92643
1	Rear panel	92603
1	Front panel	92604
2	Handle	92605
4	Console foot	92606
1	Transformer 400 VA	92607
1	Thermostat for cooling fan	92608
1	Knob f. mains switch	92611

PCS.	COMPONENTS	ORDER NO.
1	Mains / fuse socket	92612
1	Mains lead: EU	58167
	UK	58165
	US	58166
2	Knob f. volume control	92616
2	Heat sink	92617
2	Speaker terminal(black + red)	92618
2	XLR input socket	92619
3	XLR output socket	92620
1	Phono input socket	92621
1	Cooling fan	92622

Amplifier and Protection Circuit

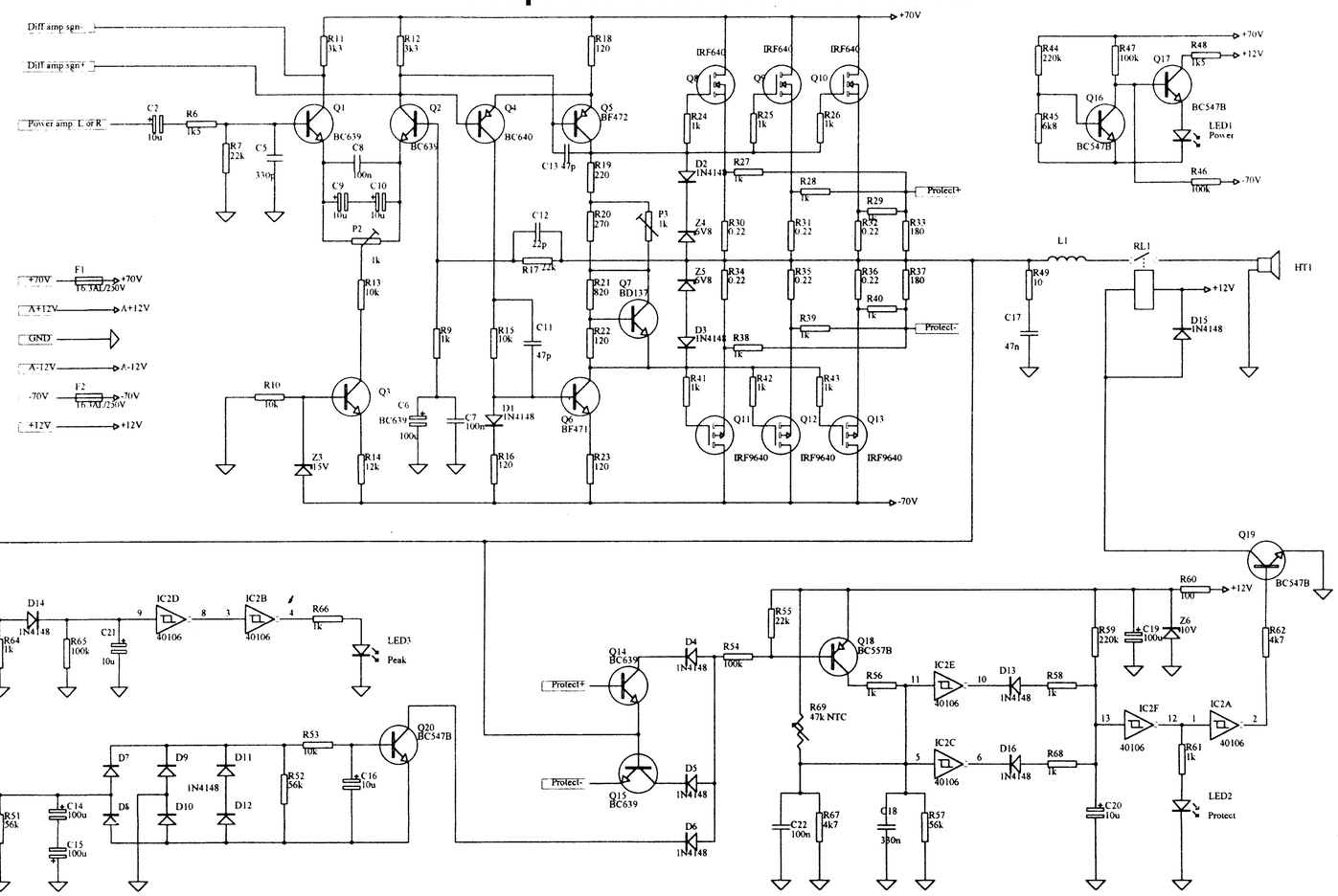

Power Supply

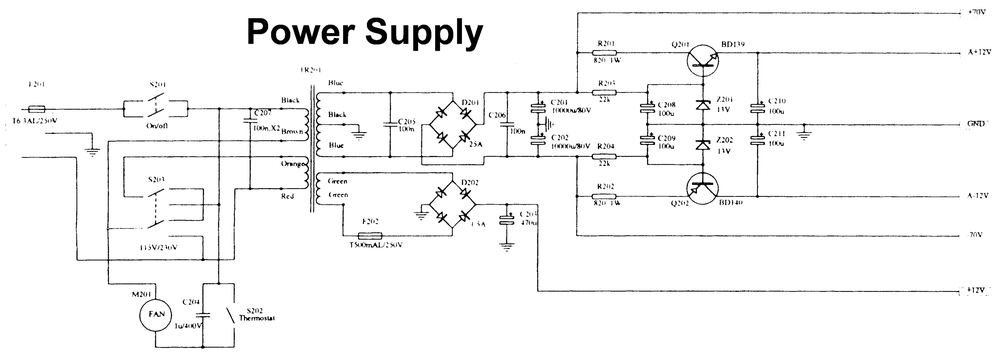

Left Input Channel and Limiter

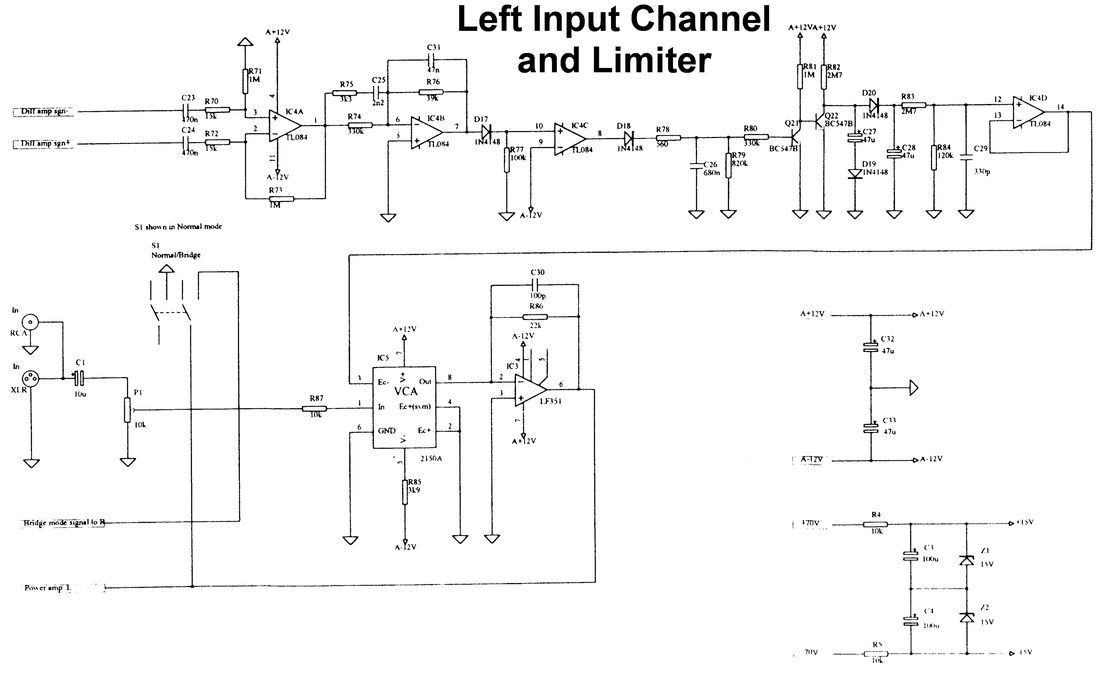

Right Input Channel and Limiter

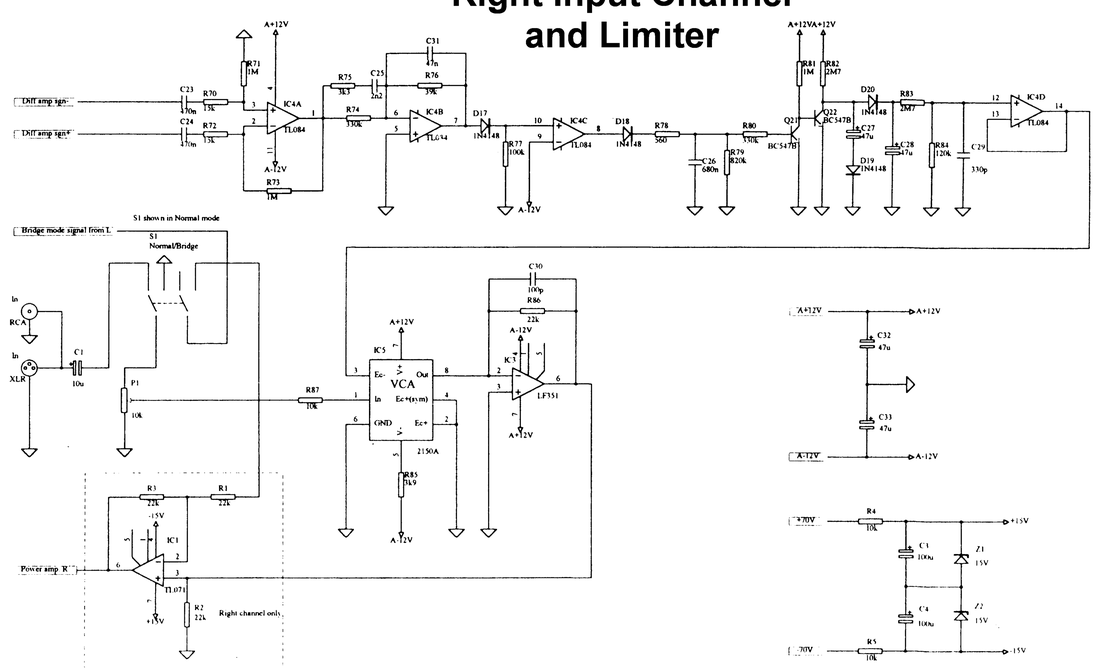

JAMO A300