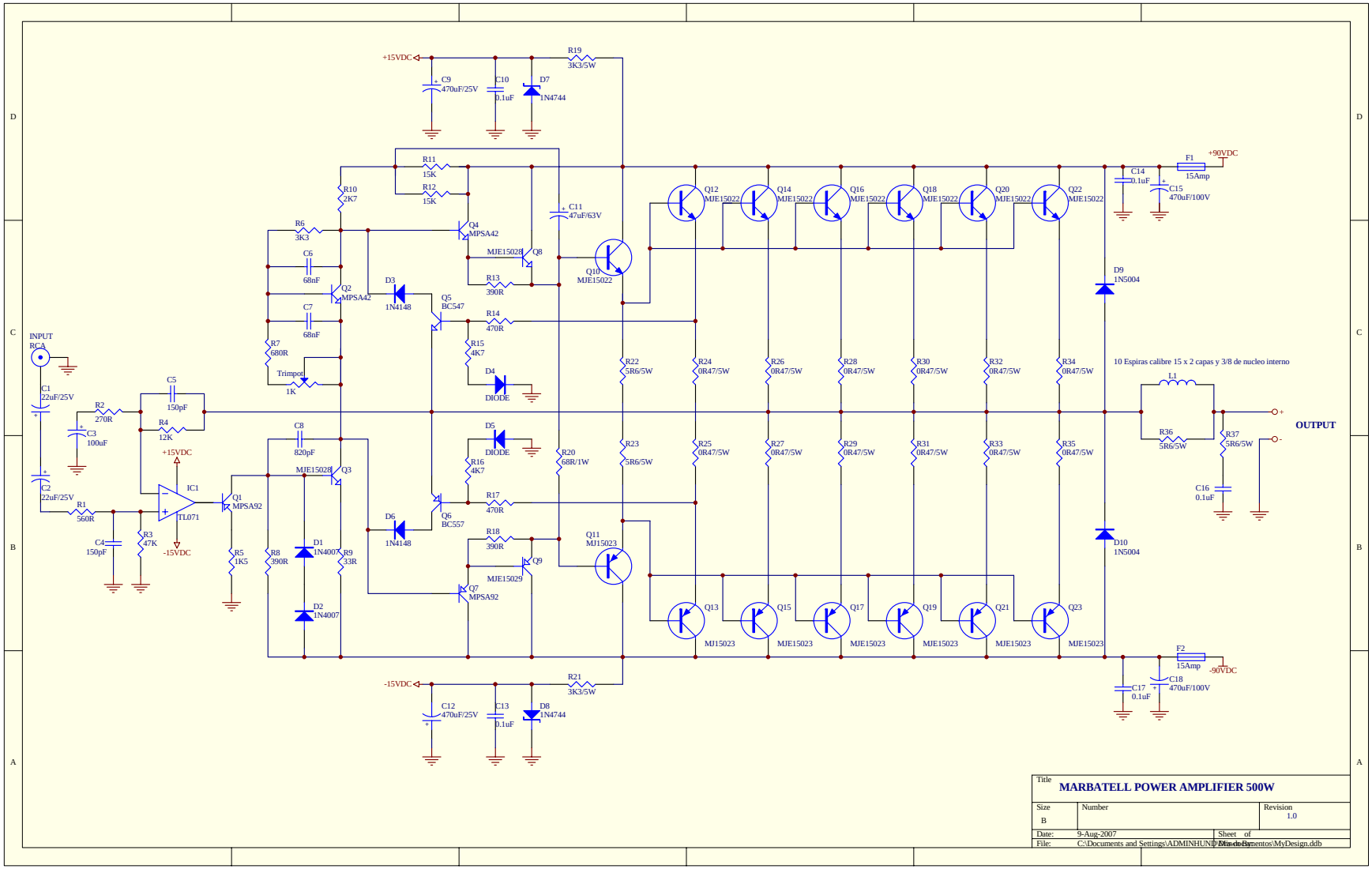


| | | |
|---|---|---|
| Title | **MARBATELL POWER AMPLIFIER 500W** | |
| Size B | Number | Revision 1.0 |
| Date: 9-Aug-2007 | Sheet of | |
| File: C:\Documents and Settings\ADMINHUND\Mis documentos\MyDesign.ddb | | |