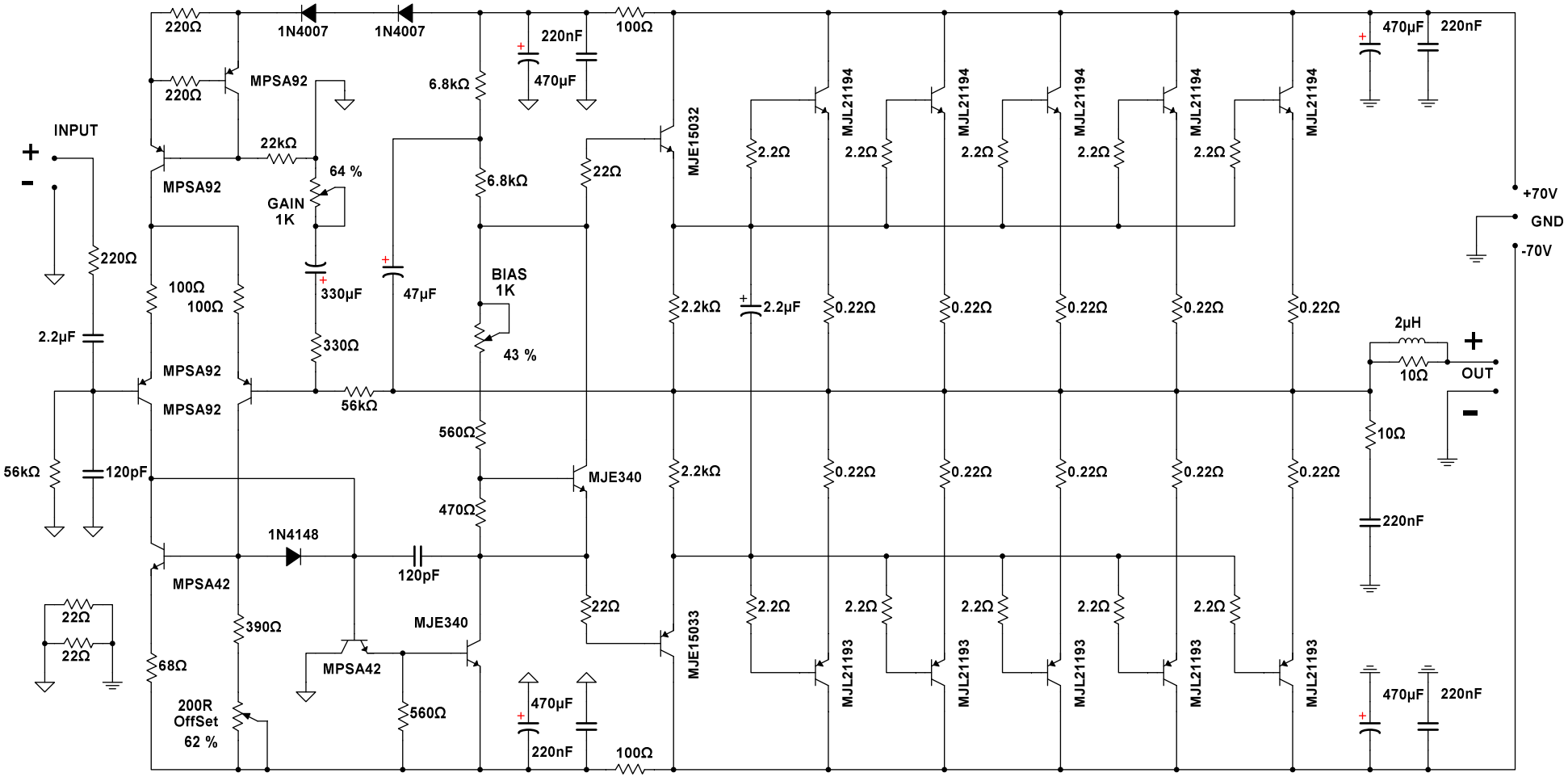DEBUNKER PHOENIX X5 - RENATO BAZZO LOPES