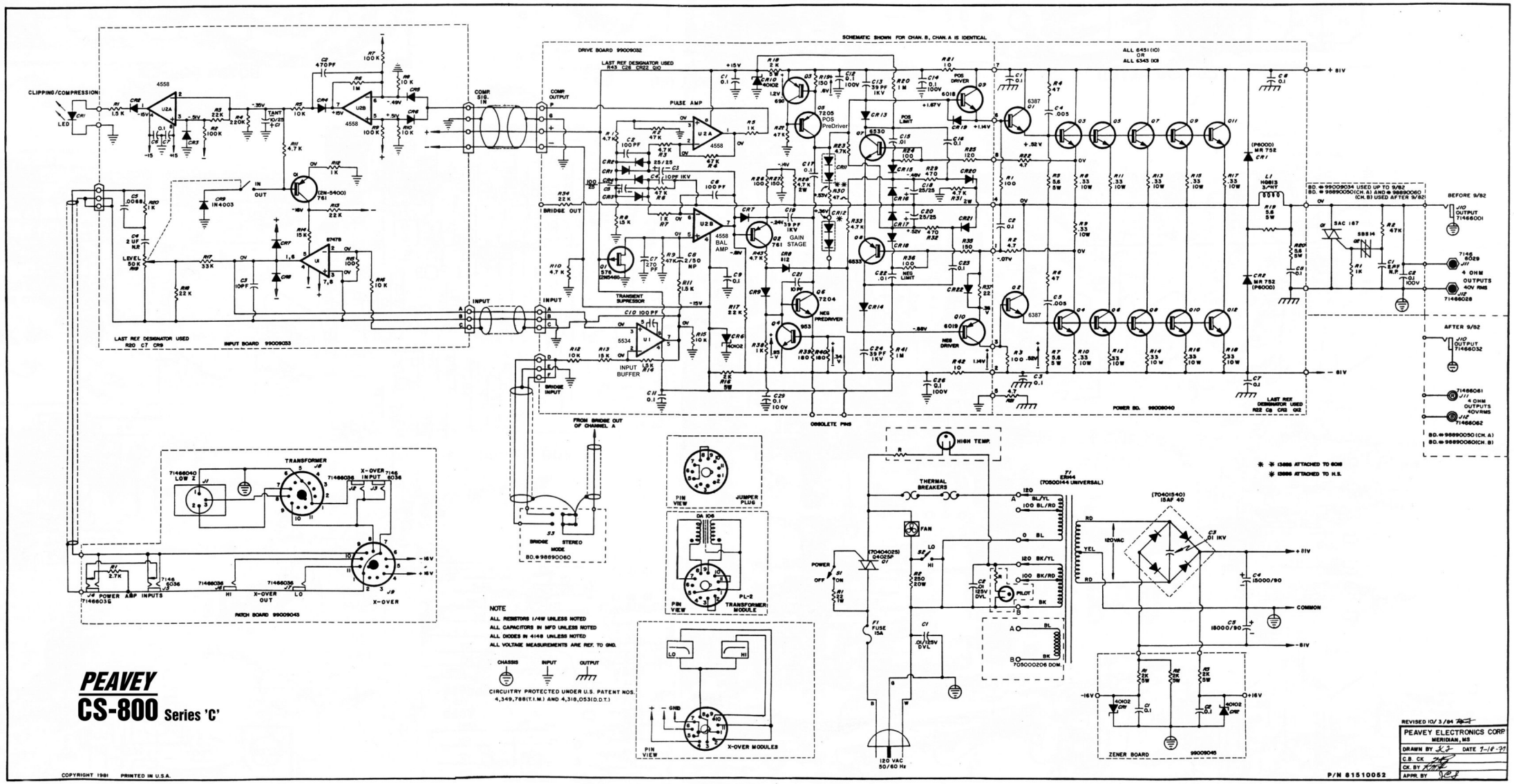

NOTE

ALL RESISTORS 1/4W UNLESS NOTED
ALL CAPACITORS IN MFD UNLESS NOTED
ALL DIODES IN 4148 UNLESS NOTED
ALL VOLTAGE MEASUREMENTS ARE REF. TO GND.

CHASSIS INPUT OUTPUT

CIRCUITRY PROTECTED UNDER U.S. PATENT NOS. 4,349,788(T.I.M.) AND 4,319,053(D.D.T.)

PEAVEY
CS-800 Series 'C'

COPYRIGHT 1981 PRINTED IN U.S.A.

P/N 81510052

REVISED 10/3/84

PEAVEY ELECTRONICS CORP.
MERIDIAN, MS

DRAWN BY JCJ DATE 7-18-77
CK. BY
C.B. CK.
CK. BY
APPR. BY