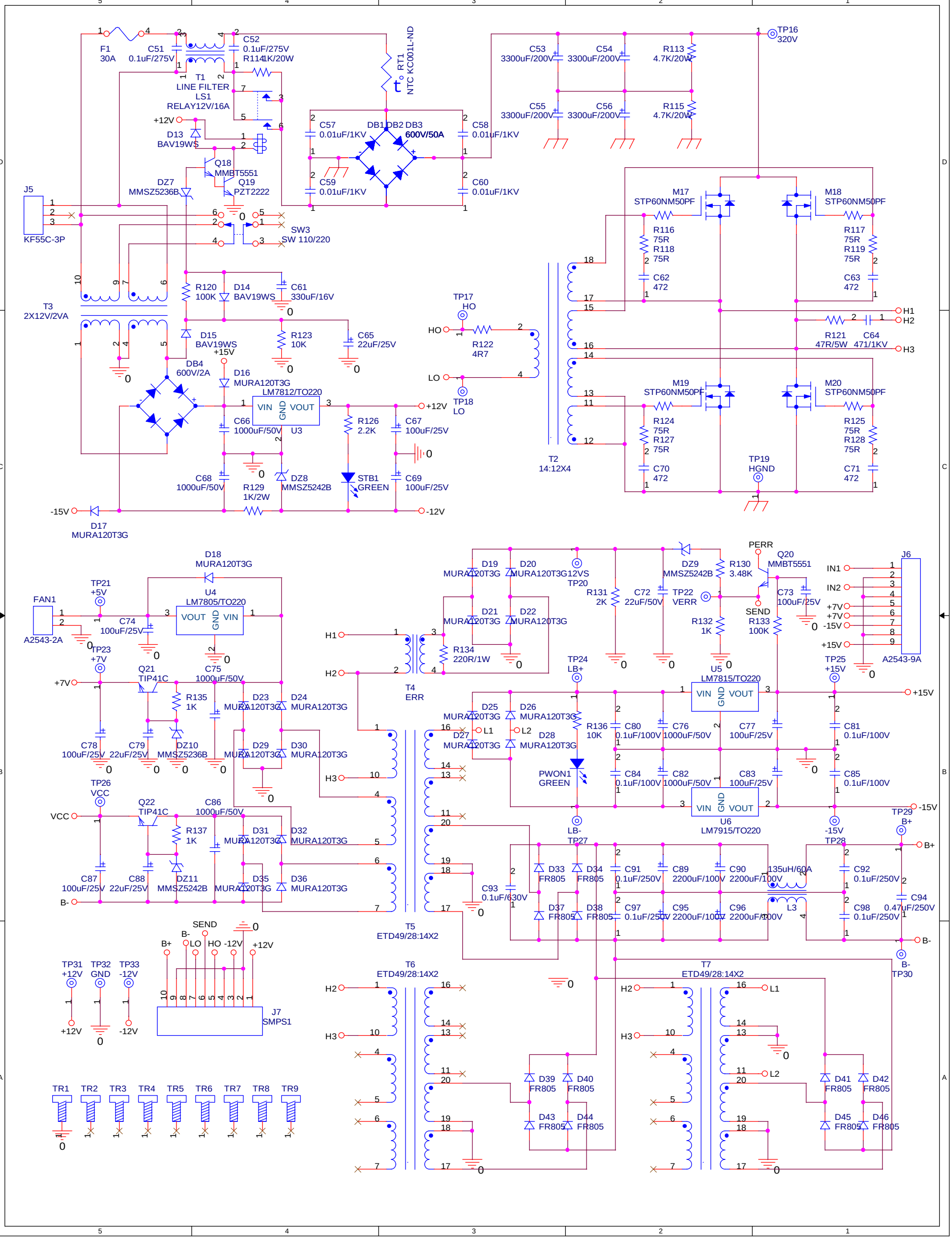
F1
30A
C51
0.1uF/275V
C52
0.1uF/275V
R114
1K/20W
T1
LINE FILTER
LS1
RELAY12V/16A
+12V
D13
BAV19WS
Q18
MMBT5551
Q19
PZT2222
DZ7
MMSZ5236B
J5
KF55C-3P
SW3
SW 110/220
RT1
NTC KC001L-ND
C57
0.01uF/1KV
C59
0.01uF/1KV
DB1 DB2 DB3
600V/50A
C58
0.01uF/1KV
C60
0.01uF/1KV
C53
3300uF/200V
C54
3300uF/200V
C55
3300uF/200V
C56
3300uF/200V
R113
4.7K/20W
R115
4.7K/20W
TP16
320V
T3
2X12V/2VA
R120
100K
D14
BAV19WS
C61
330uF/16V
D15
BAV19WS
R123
10K
C65
22uF/25V
DB4
600V/2A
D16
MURA120T3G
+15V
LM7812/TO220
VIN GND VOUT
U3
C66
1000uF/50V
R126
2.2K
C67
100uF/25V
C68
1000uF/50V
R129
1K/2W
DZ8
MMSZ5242B
STB1
GREEN
C69
100uF/25V
-15V
D17
MURA120T3G
+12V
-12V
TP17
HO
R122
4R7
LO
TP18
LO
T2
14:12X4
M17
STP60NM50PF
M18
STP60NM50PF
R116
75R
R118
75R
C62
472
R117
75R
R119
75R
C63
472
H1
H2
H3
R121
47R/5W
C64
471/1KV
M19
STP60NM50PF
M20
STP60NM50PF
R124
75R
R127
75R
C70
472
R125
75R
R128
75R
C71
472
TP19
HGND
D18
MURA120T3G
FAN1
A2543-2A
TP21
+5V
U4
LM7805/TO220
VOUT GND VIN
C74
100uF/25V
C75
1000uF/50V
TP23
+7V
Q21
TIP41C
R135
1K
D23
MURA120T3G
D24
MURA120T3G
C78
100uF/25V
C79
22uF/25V
DZ10
MMSZ5236B
D29
MURA120T3G
D30
MURA120T3G
TP26
VCC
Q22
TIP41C
C86
1000uF/50V
R137
1K
D31
MURA120T3G
D32
MURA120T3G
C87
100uF/25V
C88
22uF/25V
DZ11
MMSZ5242B
D35
MURA120T3G
D36
MURA120T3G
B-
D19
MURA120T3G
D20
MURA120T3G
12VS
TP20
D21
MURA120T3G
D22
MURA120T3G
R131
2K
C72
22uF/50V
TP22
VERR
DZ9
MMSZ5242B
R130
3.48K
PERR
Q20
MMBT5551
SEND
R132
1K
R133
100K
C73
100uF/25V
J6
A2543-9A
IN1
IN2
+7V
-15V
+15V
TP25
+15V
R134
220R/1W
T4
ERR
TP24
LB+
U5
LM7815/TO220
D25
MURA120T3G
D26
MURA120T3G
D27
MURA120T3G
D28
MURA120T3G
L1
L2
R136
10K
C80
0.1uF/100V
C76
1000uF/50V
C77
100uF/25V
C81
0.1uF/100V
PWON1
GREEN
C84
0.1uF/100V
C82
1000uF/50V
C83
100uF/25V
C85
0.1uF/100V
U6
LM7915/TO220
LB-
TP27
-15V
TP28
TP29
B+
D33
FR805
D34
FR805
C91
0.1uF/250V
C89
2200uF/100V
C90
2200uF/100V
135uH/60A
L3
C92
0.1uF/250V
C93
0.1uF/630V
D37
FR805
D38
FR805
C97
0.1uF/250V
C95
2200uF/100V
C96
2200uF/100V
C98
0.1uF/250V
C94
0.47uF/250V
B-
B-
TP30
T5
ETD49/28:14X2
T6
ETD49/28:14X2
T7
ETD49/28:14X2
D39
FR805
D40
FR805
D43
FR805
D44
FR805
D41
FR805
D42
FR805
D45
FR805
D46
FR805
SEND
B-
B+
LO
HO
-12V
+12V
TP31
+12V
TP32
GND
TP33
-12V
J7
SMPS1
TR1
TR2
TR3
TR4
TR5
TR6
TR7
TR8
TR9