Studio™ Series

S120PII

Preliminary Service Manual

JBL Consumer Products
250 Crossways Park Dr.
Woodbury, New York 11797

- CONTENTS -

BASIC SPECIFICATIONS ……..……..1
DETAILED SPECIFICATIONS ……..……..2
CONNECTIONS……..……..…...…..…4
OPERATION ……..……..…….…...7
BASIC TROUBLESHOOTING..……8
S120PII AMPLIFIER BLOCK DIAGRAM…….9
S120PII MECHANICAL/PACKING PARTS LIST….....10
P.C.B. DRAWINGS….…….……11
S120PII ELECTRICAL PARTS LIST ..…….….13
S120PII SCHEMATICS……..…….….20

JBL S120PII SPECIFICATIONS

Amplifier Power (RMS):	400 Watts
Driver:	12" PolyPlas™ (polymer-coated cellulose fiber)
Inputs:	Line Level (switchable to LFE), BassQ™ and Speaker Level
Outputs:	BassQ and Speaker Level (High-Pass)
Low-Pass Frequency:	Continuously variable from 50Hz – 150Hz
High-Pass Frequency:	150Hz when using speaker-level outputs
Frequency Response:	22Hz – Low-pass crossover setting
Dimensions (H x W x D):	17-3/16" x 16-3/16" x 18" (19" with grille)
(with feet, without spikes)	437 x 411 x 457mm (483mm with grille)
Weight:	56 lb/25.5kg

All features and specifications are subject to change without notice.

S120PII 300W Powered Sub/ Plate Amp

LINE VOLTAGE	Yes/No	Hi/Lo Line	Nom.	Unit	Notes
US 120vac/60Hz	Yes	108-132	120	Vrms	Normal Operation
EU 230vac/50-60Hz	Yes	207-264	230	Vrms	Normal operation, MOMS required

Parameter	Spec	Unit	QA Test Limits	Conditions	Notes
Amp Section					
Type (Class AB, D, other)	D	n/a	n/a		Bridge type amplifier, None of the speaker terminals must be connected to system GND at any time.
Load Impedance (speaker)	6	Ohms	n/a	Nominal	
Rated Output Power	275	Watts	220	1 input driven	Limiter prevents continuous power to exceed 220 Watts.
THD @ Rated Power	0.1	%	1	22k filter	
THD @ 1 Watt	0.1	%	0.5	22k filter	
DC Offset	10	mV-DC	60	@ Speaker Outputs	
Damping factor	>50	DF	23	Measured at amplifier board	Measured at the speaker cable. 200 Watts, measured at speaker output terminals located at the amp board.
Input Sensitivity					
Input Frequency	50	Hz	50	Nominal Freq.	
L&R	425	mVrms	±2dB	To 200 Watts	Single input driven
LFE Mode selected	425	mVrms	±2dB	To 200 Watts	LFE Mode selected, single input driven
Bass Q Input	0.9	Vrms	±2dB	To 200 Watts	Single input driven
Speaker/Hi Level Input	5.5	Vrms	±2dB	To 200 Watts	Single input driven
Signal to Noise					
SNR-A-Weighted	100	dBA	85	relative to rated power	A-Weighting filter
SNR-unweighted	90	dBr	85	relative to rated power	22k filter
SNR rel. 1W-unweighted	65	dBr	60	relative to 1W Output	22k filter
Residual Noise Floor	1	mVrms	2	Volume @max, using RMS reading DMM/VOM (or A/P)	
Residual Noise Floor	1	mVrms(max)	2	Volume @max, w/ A/P Swept Bandpass Measurement (Line freq.+ harmonics)	
Input Impedance					
Line Input (L, R,LFE)	10K	ohms	n/a	Nominal	
Speaker/Hi Level Input	10K	ohms	n/a	Nominal	
Filters					
LP 4th order fixed	50-150	Hz	± 10		2nd order variable and 2nd order fixed
Subsonic filter (HPF) 3rd Order	Fixed				
LFE Low pass 2nd order	Fixed	Hz	± 10	LFE input driven only	
Limiter					
THD at Max. Output Power	YES	n/a	functional	Maximum Output Power	
Features	--				
Auto - On -Off switch	YES	--	functional		Refer to ATO section
Phase switch	0-180	deg	functional		
Volume pot Taper (lin/log)	LOG	--	functional		A Taper
Variable crossover 50-150 Hz	YES		functional		
HP Speaker out			functional		HP single order filter 180 Hz @ 8 Ohms, 90 Hz @ 4 Ohms load
LFE -Normal Select switch	YES	--	functional		Disables LP filter, intended for LFE
BassQ Input	YES		functional		6.3mm Phono Jack
BassQ Output	YES		functional		Bypass, loop-through - Designed for daisy chain
Input Configuration					
Line In (L,R) & LFE	YES	--	functional		Dual RCA jack
Bass Q in	YES		functional		6.3m phono mono Jack
Spkr/Hi Level In	YES	--	functional		Binding post connector L&R
Signal Sensing (ATO)					
Auto-Turn-On (yes/no)	YES		functional	Auto - on selection switch in Auto	
ATO Input test frequency	50	Hz	functional	"	
ATO Level LFE Input	2	mV	functional	"	
ATO Level Speaker in	50	mV	functional	"	
ATO Level Bass Q input	2	mV	functional	"	
ATO Turn-on time	1	seconds	functional	Amp connected and AC on, then input signal applied	
Auto Mute/ Turn-OFF Time	15	minutes	17	T before muting, after signal is removed	Auto turn of time (T) must be 10 > T < 17 Minutes
Power on Delay time	3	sec.	4	AC Power Applied	

Parameter	Spec	Unit	QA Test Limits	Conditions	Notes
Transients/Pops					
ATO Transient	5	mV-peak	n/a	@ Speaker Outputs	
Turn-on Transient	50	mV-peak	2v-pp	@ Speaker Outputs	AC Line cycled from OFF to ON
Turn-off Transient	50	mV-peak	2v-pp	@ Speaker Outputs	AC Line cycled from ON to OFF
Efficiency					
Efficiency	70	%	65	Rated power	Nominal Line voltage 120 VAC
Stand-by Input Power	12	Watts	15	@ nom. line voltage	Maximum allowable input power under nominal Input voltage and frequency, in stand-by mode (HOT or COLD operation).
Power Cons. @ rated power	400	Watts	400	@ nom. line voltage	250 Watts @ 6.0 Ohms nominal line voltage
Protection					
Short Circuit Protection	YES		functional	Direct short at output	Amplifier should resume operation after short circuit condition removal
Thermal Protection	YES		functional	@1/8 max unclipped Power	Temperature rise in accessible metal parts should not exceed 35K rise for domestic version or 30K rise for European versions
DC Offset Protection	YES		-	DC present at Speaker Out leads	Relay or crowbar (for driver/fire protection),
Line Fuse Rating					
USA-Domestic	4	Amps		Type-T or Slo Blo-250 V	
EU	2	Amps		Type-T or Slo Blo-250 V	Internal fuse with UL/SEMKO rated holder

SPEAKER CONNECTION

When we designed the S120PII powered subwoofer, our goal was to offer the user the best possible performance combined with the most flexible and complete installation options. Please look over the following three examples to determine which description best matches your system and follow the corresponding hookup instructions.

To use the binding-post speaker terminals ❽❾ with bare wire, unscrew the collar until the pass-through hole in the center post is visible under the collar. Insert the bare end of the wire through the hole in the post, then screw the collar back down until the connection is tight. The holes in the center of the collars are intended for banana-type connectors.

Dolby* Pro Logic* (Non-Digital) – Speaker Level

Use this installation method for Dolby Pro Logic applications (not Dolby Digital, DTS® or other digital processing), where the receiver/processor does not have a subwoofer output or a volume-controlled preamp (line-) level output:

If your receiver features bass management capabilities that require you to configure your speaker settings, make sure to set your left- and right-front speakers to "LARGE".

Connect your receiver or amplifier's front left and right speaker terminals to the left and right terminals on the subwoofer that are marked "High Level In" ❽. Connect the left and right terminals on the subwoofer that are marked "High Level Out" ❾ to the corresponding terminals on the back of your front left and right speakers.

Connect your receiver or amplifier's center, left and right surround-speaker terminals to the corresponding terminals on the back of your center, left and right surround speakers.

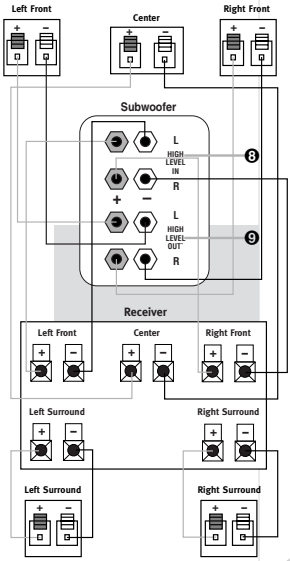

Dolby Pro Logic (Non-Digital) – Line Level

Use this installation method for Dolby Pro Logic applications (not Dolby Digital, DTS or other digital processing), where the receiver/processor is equipped with a subwoofer output or a volume-controlled preamp (line-) level output:

Use RCA-type patch cords to connect the line-level subwoofer outputs on your receiver or amplifier to the Line Level inputs ❼ on the subwoofer. IMPORTANT: Make sure that the LFE toggle switch ❷ on the subwoofer is in the "Normal" position. Do not use the "LFE" position with Dolby Pro Logic-only processors.

Note: If your receiver or amplifier only has one subwoofer output jack, then you may connect the subwoofer output on your receiver/preamplifier to either the left or right Line Level input ❼ on the subwoofer. It makes no difference which jack you choose.

Connect each speaker to the corresponding speaker terminals on your receiver or amplifier.

Make sure your receiver or processor is configured correctly: Make sure that the subwoofer is configured as "On."

Note for advanced users: If your receiver/processor has a built-in low-pass crossover filter for the subwoofer output, then the LFE switch ❷ should be set to the "LFE" position to bypass the subwoofer's internal crossover.

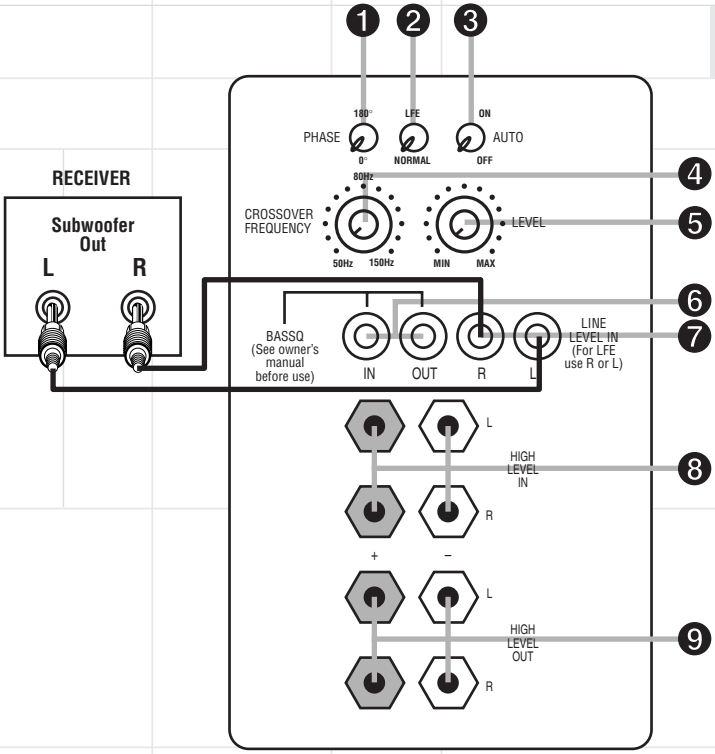

Dolby Digital or DTS (or Other Digital Surround Mode) Connection

Use this installation method for Dolby Digital, DTS or other digital surround processors:

IMPORTANT: Make sure that the LFE toggle switch ❷ on the subwoofer is in the "LFE" position. Use the Line Level input jacks ❼ for the Low-Frequency Effects channel. Connect these jacks to the LFE output or subwoofer output on your receiver or amplifier.

Note: If your receiver or amplifier has only one subwoofer output jack, then you may connect the subwoofer output on your receiver/preamplifier to either the left or right Line Level input ❼ on the subwoofer. It makes no difference which jack you choose.

Connect each speaker to the corresponding speaker terminals on your receiver or amplifier.

Make sure that you have configured your surround sound processor for "Subwoofer On" or "LFE On." The front left, front right, center and rear speakers should be set to "Small" or "Large" depending on their size and frequency response. Consult your receiver's or processor's owner's manual.

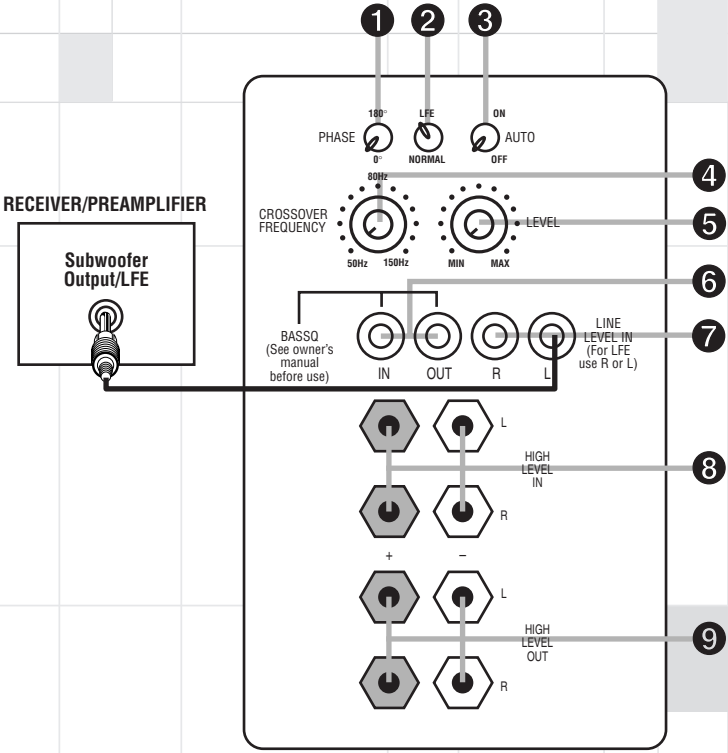

BassQ™ Jacks

The jacks marked "BassQ" ❻ are for use with the JBL BassQ bass equalization module that will be released in the near future. The BassQ will enable you to optimize your system's bass response by equalizing the output of multiple subwoofers to best match your listening environment. **DO NOT** connect these jacks to any other device. Do not use the BassQ jacks ❻ without having first read the BassQ owner's manual.

OPERATION

Power

The S120PII is equipped with both a master Power switch ❿ and an Auto turn-on/turn-off switch ❸. In order to function, the S120PII must be plugged into an active electrical outlet (but not an accessories outlet on another component of your audio system such as a receiver), and the master Power switch ❿ must be turned on (the "•" position).

The Auto turn-on/turn-off switch ❸ has three positions:

On The subwoofer is on at all times and ready to play program material.

Auto As long as no audio signal is received, the subwoofer is in Standby mode to conserve power, indicated by the red color of the LEDs on the front of the unit. When an audio signal is sensed, the subwoofer will switch itself into the fully On mode and begin playing the program material. The LEDs will turn green. When a period of about twenty minutes goes by during which no signal is sensed, the S120PII will return to Standby mode, indicated by the LEDs turning red.

Off The subwoofer is off at all times, even if an audio signal is present at its inputs.

If you plan to be away for an extended time, or if the subwoofer will not be used, you may wish to turn off the master Power switch ❿.

Level Control

The subwoofer Level Control ❺ adjusts the volume of the subwoofer relative to the rest of the system. Proper level adjustment depends on several variables such as room size, subwoofer placement, type of main speakers and listener position. Adjust the subwoofer level so that the volume of the bass information is pleasing to you.

When using a Dolby Digital/ DTS receiver, adjust the LFE level on the receiver to 0dB, and then adjust the subwoofer Level Control ❺ for the desired amount of bass.

Crossover Adjustments

The Crossover Frequency Control ❹ determines the highest frequency at which the subwoofer reproduces sounds. If your main speakers can comfortably reproduce some low-frequency sounds, set this control ❹ to a lower frequency setting, between 50Hz – 100Hz. This will concentrate the subwoofer's efforts on the ultradeep bass sounds required by today's films and music. If you are using smaller bookshelf speakers that do not extend to the lower bass frequencies, set the low-pass Crossover control ❹ to a higher setting, between 120Hz – 150Hz. This control ❹ is not used when the LFE switch ❷ is in the "LFE" position.

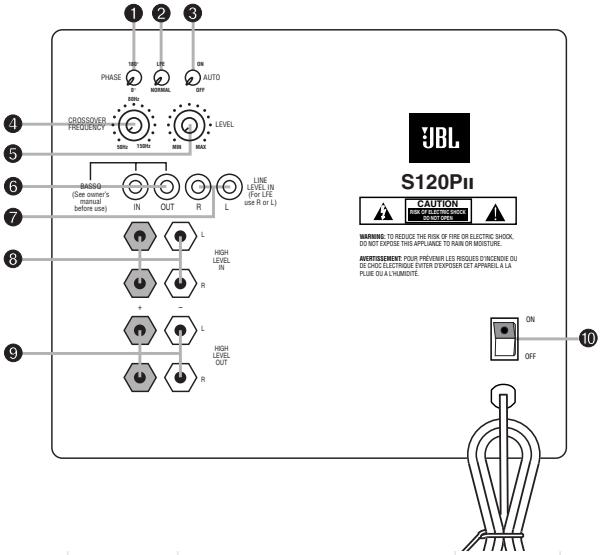

Phase Control

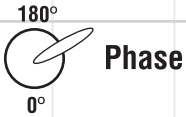

The Phase Control ❶ determines whether the subwoofer's piston-like action moves in and out in phase with the main speakers or opposite the main speakers. There is no correct or incorrect setting. Proper phase adjustment depends on several variables such as subwoofer placement and listener position. Adjust the Phase switch ❶ to maximize bass output at the listening position.

Remember, every system, room and listener is different. There are no right or wrong settings; this switch ❶ offers the added flexibility to adjust your subwoofer for optimum performance for your specific listening conditions without having to move your speakers. If at some time in the future you happen to rearrange your listening room and move your speakers, you should experiment with the Phase switch ❶ in both positions, and leave it in the position that maximizes bass performance.

TROUBLESHOOTING

If you used the High Level (speaker) inputs ❽ and there is no sound from any of the speakers:

• Check that receiver/amplifier is on and a source is playing.
• Check that powered subwoofer is plugged into an active electrical outlet and is switched on ❸❿.
• Check all wires and connections between receiver/amplifier and speakers. Make sure all wires are connected. Make sure none of the speaker wires are frayed, cut or punctured. Make sure no wires are touching other wires or terminals and creating a short circuit.
• Review proper operation of your receiver/amplifier.

If there is low (or no) bass output:

• Make sure the connections to the left and right "Speaker Inputs" ❽ have the correct polarity (+ and –).
• Make sure that the subwoofer is plugged into an active electrical outlet and that both power switches are on ❸❿.
• Adjust the Crossover point ❹.
• Flip the Phase Control switch ❶ to the opposite position.
• If you are using a Dolby Digital/DTS receiver or processor, make sure that the subwoofer adjustments on the receiver/processor are set up correctly. When using the S120PII's Speaker Level inputs ❽, you should set your receiver to configure the main left and right speakers as "LARGE".
• Slowly turn the Level Control ❺ clockwise until you begin to hear the desired amount of bass.

If you used the Line Level inputs ❼ and there is no sound from the subwoofer:

• Check that receiver/amplifier is on and a source is playing.
• Check that powered subwoofer is plugged into an active electrical outlet and that both Power switches are on ❸❿.
• Check all wires and connections between receiver/amplifier and subwoofer. Make sure all wires are connected. Make sure none of the wires are frayed, cut or punctured.
• Review proper operation of your receiver/amplifier.
• Slowly turn the Level Control ❺ clockwise until you begin to hear the desired amount of bass.
• Make sure that you have configured your receiver/processor so that the subwoofer/LFE output is on.

S120PII BLOCK DIAGRAM

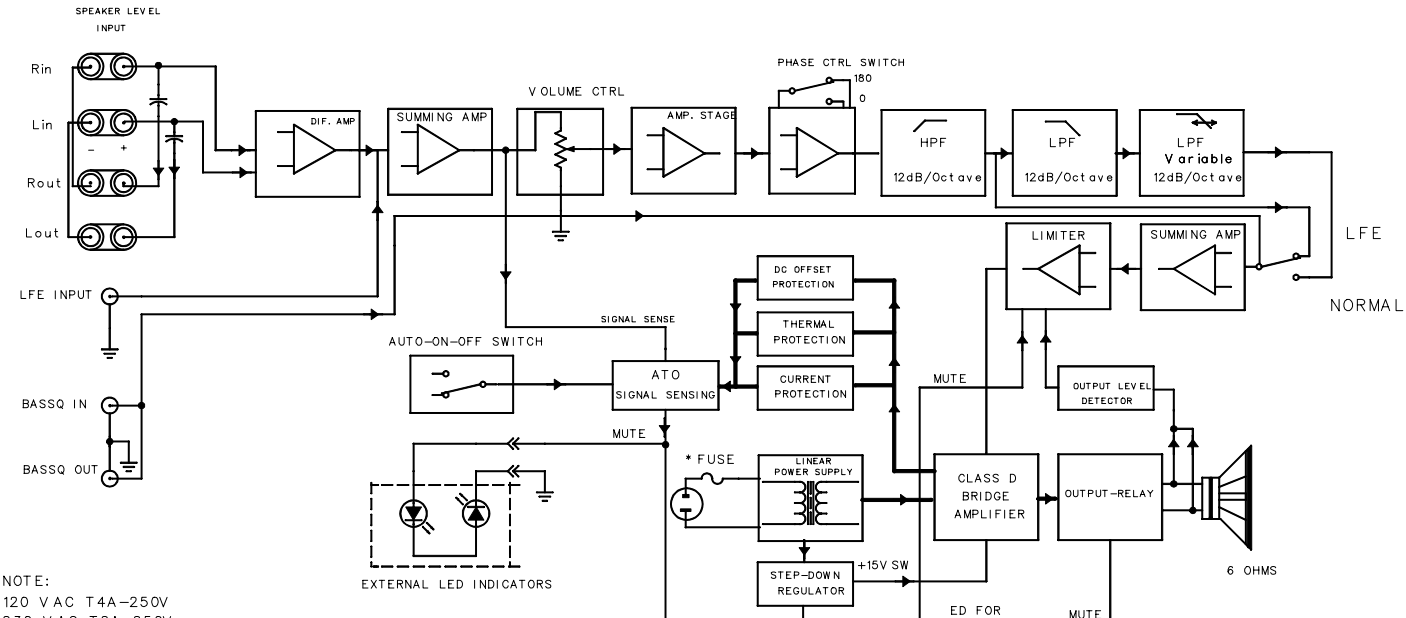

NOTE:
120 VAC T4A-250V
230 VAC T2A-250V

JBL S120PII MECHANICAL/PACKING PARTS LIST

ITEM	DESCRIPTION	QTY	PART NUMBER
1	12” WOOFER (4.4 ohms DCR)	1	338008-001
2	FRONT GRILLE	1	338007-001
3	GRILLE RETAINER	4	333249-001
4	AMPLIFIER ASSEMBLY	1	NOT FOR SALE
5	PORT TUBE	1	337859-001
6	RUBBER FOOT ASS’Y	4	338037-001
7	SPIKE FOOT KIT	1	338076-001
8	OUTER CARTON	1	338001-001
9	END PAD – TOP/BOTTOM	2	338002-001
10	OWNER’S MANUAL	1	338003-001
11	SURVEY CARD	1	331384-001
12	WARRANTY CARD	1	338381-001

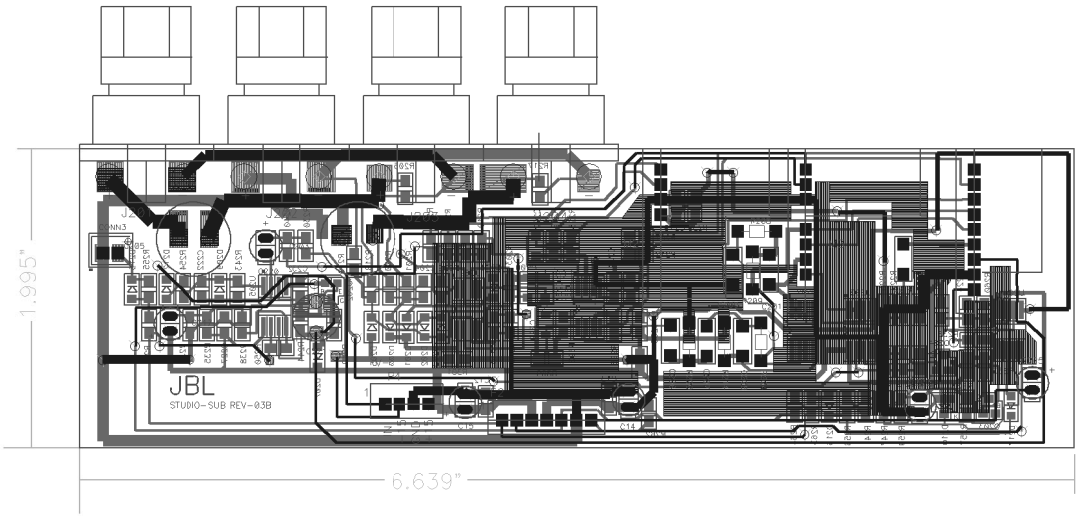
JBL
STUDIO-SUB REV-03B
1.995"
6.639"

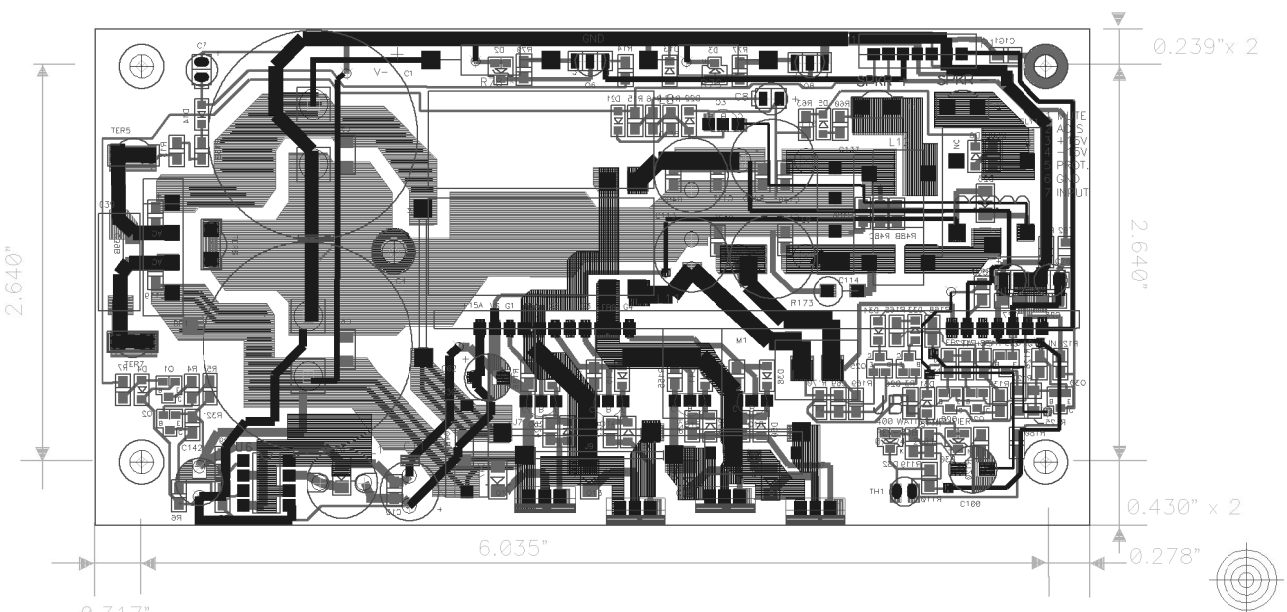
0.239"x 2
2.640"
2.640"
0.430" x 2
6.035"
0.278"
0.317"

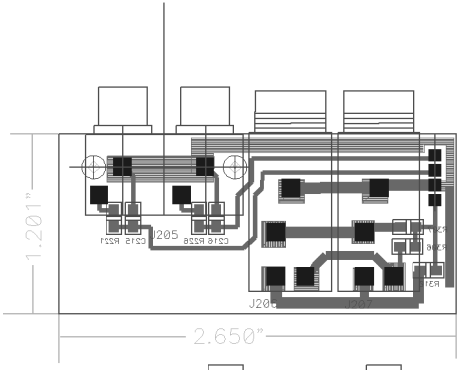
1.201"
2.650"
J205

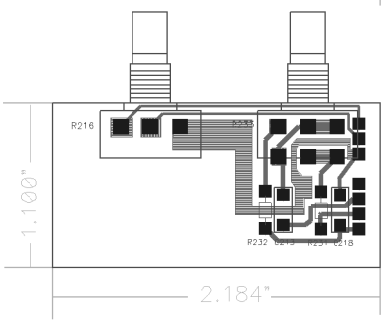
R216
1.100"
2.184"

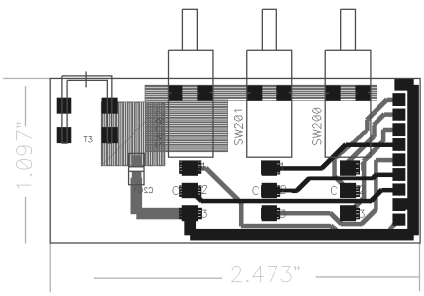
SW201
SW200
T3
1.097"
2.473"

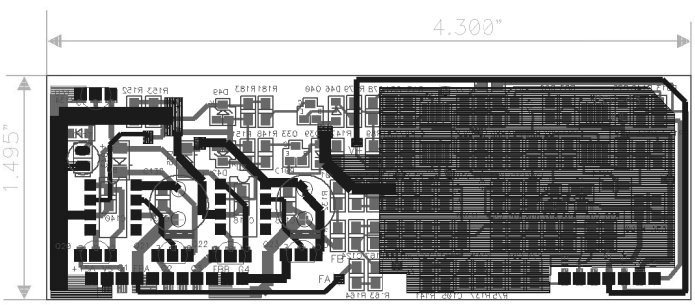
4.300"
1.495"

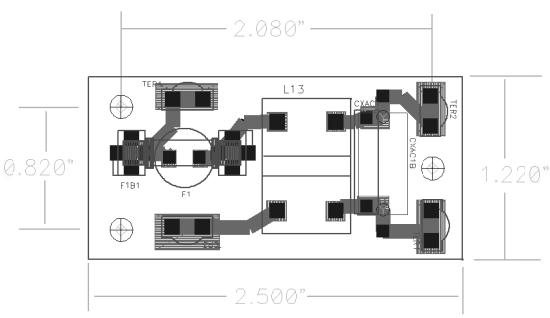
2.080"
L13
F1B1
F1
0.820"
1.220"
2.500"

S120PII ELECTRICAL PARTS LIST

Part Number	Qty	Description		Reference Designator
Amplifier PCB				
Resistors				
021-100401-020	1	Metal oxide film resistor	1K 1W J FK TYPE	R173
021-620303-020	2	Metal oxide film resistor	620R 3WS J 8x20 KINK	R76,78
022-005105-020	1	cement resistor	PN:SQM 0R05 5W J 25x13	R2
0024-00098-120	1	SMD resistor	0R 1/8W J 0805 TAPING	R8
024-100498-120	2	SMD resistor	1K 1/8W J 0805 TAPING	R110,169
024-100598-120	14	SMD resistor	10K 1/8W J 0805 TAPING	R5,7,16,118,121,122,125,126, 128,138,165,170,168,139
024-100698-120	2	SMD resistor	100K 1/8W J 0805 TAPING	R15,120
024-130498-100	1	SMD resistor	1K3 1/8W F 0805 TAPING	R119
024-160598-100	2	SMD resistor	16K 1/8W F 0805 TAPING	R13,13B
024-220498-121	1	SMD resistor	2K2 1/8W J 0805 TAPING	R17
024-220598-120	1	SMD resistor	22K 1/8W J 0805 TAPING	R127
024-330498-120	2	SMD resistor	3K3 1/8W J 0805 TAPING	R77,79
024-330598-120	5	SMD resistor	33K 1/8W J 0805 TAPING	R4,6,14,60,60B
024-470298-120	4	SMD resistor	47R 1/8W J 0805 TAPING	R24,25,26,27
024-470398-120	4	SMD resistor	470R 1/8W J 0805 TAPING	R145,155,177,186
024-470598-120	2	SMD resistor	47K 1/8W J 0805 TAPING	R3,171
024-510498-120	5	SMD resistor	5K1 1/8W J 0805 TAPING	R48A,48B,48C,48D,48E
024-910498-120	1	SMD resistor	9K1 1/8W J 0805 TAPING	R63
025-010300-000	1	Thermistor	TSE-103 K L:50mm	TH1
Capacitors				
031-100184-100	2	SMD capacitor	0u01/250V K 0805 X7R TAPING	C104,119
031-100244-100	2	SMD ceramic capacitor	0u01/50V K 0805 X7R TAPING	C27,28
031-100344-100	6	SMD capacitor	0u1/50V K 0805 X7R TAPING	C10,69,112,115,135,138
031-100384-100R	2	SMD capacitor	0u1/250V K 1206 X7R TAPING	C5,6
031-470144-101	1	SMD capacitor	0u0047/50V K 0805 X7R TAPING	C1G1
032-100484-200	3	END PE capacitor	1uF/250V K P:15mm	C37,39,30
033-330444-270	2	NPE capacitor	3u3/50V K10 (R)8x13 SBE	C114,137
033-680464-270	2	NPE capacitor	6u8/100V K10 (R)1020 GNE	C113,136
034-100614-300	1	Electrolytic capacitor	100uF/16V M (R)0611 P:2.5	C8
034-100625-300	1	Electrolytic capacitor	100uF/25V M (R)6.3x11 P:5	C62
034-100695-300	1	Electrolytic capacitor	100uF/63V M (R)1012 P:5 TAPING	C142
034-100895-204	2	Electrolytic capacitor	10000uF/63V M R30x51 85□	C1,4
034-220525-300	2	Electrolytic capacitor	22uF/25V M (R) 5x11 P:2.5	C25,26
034-330625-300	2	Electrolytic capacitor	330uF/25V M (R)1013 P:5	C11,100
034-470415-300	1	Electrolytic capacitor	4u7/50V M (R)0511 P:2.0	C7

Part Number	Qty	Description		Reference Designator
Semiconductors				
051-000600-100	1	Transistor NPN	MPSW06RLRA TO-92 TAPING	Q6
051-005600-100	1	Transistor NPN	MPSW56RLRA MPQ TO-92 TAPING	Q8
051-290700-100	4	Transistor	P2N2907A TO-92 TAPING	Q12,14,16,18
051-540101-000	1	Transistor PNP	2N5401 TO-92 TAPING	Q3
051-640000-100	4	MOSFET N-Channel	IRF640 TO-220	Q11,13,15,17
052-400080-000	1	Diode Bridge	PN:RS804 400V,8A	BR1
053-257400-100	1	IC;DIP 8P LM2574 HVN-15V	0.5A Step-Down Voltage Regulator	U6
054-000100-100	6	SMD DIODE	ES1D 200V,1A,35ns TAPING	D1,23,37,40,44,47
054-001002-100	1	SMD ZENER DIODE	10V SOT-23 BZX84C10 TAPING	D32
054-001501-100	2	SMD ZENER DIODE	15V SOT-23 BZX84C15 TAPING	D2,3
054-033904-100	3	SMD TR (MOTOROLA)	MMBT3904LT1 SOT23 TAPING	Q25,28,29
054-033906-100	3	SMD TR (MOTOROLA)	MMBT3906LT1 SOT23 TAPING	Q26,27,30
054-050601-100	1	SMD ZENER DIODE	5.6V SOT-23 BZX84C5V6 TAPING	D30
054-414803-100	14	SMD diode	LL4148 TAPING	D4-6,13,14,21,22,31,33,34, 38,41,45,48
054-540100-100	1	SMD PNP transistor	MMBT5401 LT1 TAPING	Q1
054-555100-100	1	SMD NPN Transistor	MMBT5551 LT1 TAPING	Q2
Miscellaneous				
072-040039-000	1	Terminal (PCB TYPE)	PC205 (t=0.8m/m) T205MA	T2
072-040064-000	2	Terminal (PCB TYPE)	PC250(t=0.8),T250MA	T1,TER6
072-040096-000	2	Terminal T187MA(PCB TYPE)	(t=0.8mm) PC187(0.8)	TER5,TER7
072-040250-000	1	Connector	7 PIN JS-1001-7 P:2.5mm	P1
073-111003-000	1	Shorting strap	54.9x13.6x1m/m	J7
073-111004-000	2	Shorting strap	29.5x12.4x0.8m/m	J4,9
074-300018-000	1	Relay	PN:943-1C-48D	RLY1
043-300101-000	2	Inductor	30uH YT-10033	L9,10
043-560200-000	1	Inductor	56uH YT-10779	L12
043-700100-000	1	Inductor	70uHx2 YT-10024	L8
043-820300-000	1	Inductor	820uH YT-10034	L1
044-100100-000	2	SMD Ferrite bead	PN:321611 600R/100MHz 1206	FB1,FB2
CLASS D DRIVER PCB (Small Upright PCB on Amp PCB)				
Resistors				
024-000098-120	4	SMD resistor	0R 1/8W J 0805 TAPING	R313,314,318,320
024-100298-120	4	SMD resistor	10R 1/8W J 0805 TAPING	R89,90,140,150
024-100498-120	10	SMD resistor	1K 1/8W J 0805 TAPING	R81,85,96,97,131,137,142, 147,162,179
024-100598-120	12	SMD resistor	10K 1/8W J 0805 TAPING	R75,82,83,92,98,132,133, 148,163,164,181,156
024-100698-120	1	SMD resistor	100K 1/8W J 0805 TAPING	R37

Part Number	Qty	Description		Reference Designator
024-110598-120	2	SMD resistor	11K 1/8W J 0805 TAPING	R74,99
024-200598-120	2	SMD resistor	20K 1/8W J 0805 TAPING	R95,141
024-220398-120	2	SMD resistor	220R 1/8W J 0805 TAPING	R136,167
024-220498-121	1	SMD resistor	2K2 1/8W J 0805 TAPING	R134
024-220798-120	2	SMD resistor	2M2 1/8W J 0805 TAPING	R87,93
024-270498-120	3	SMD resistor	2K7 1/8W J 0805 TAPING	R80,84,157
024-390498-120	2	SMD resistor	3K9 1/8W J 0805 TAPING	R130,161
024-390598-120	2	SMD resistor	39K 1/8W J 0805 TAPING	R86,94
024-470398-120	1	SMD resistor	470R 1/8W J 0805 TAPING	R91
024-470498-120	6	SMD resistor	4K7 1/8W J 0805 TAPING	R151-153,183,34,36
024-470598-120	1	SMD resistor	47K 1/8W J 0805 TAPING	R35
024-470698-120	2	SMD resistor	470K 1/8W J 0805 TAPING	R32,33
024-560598-120	1	SMD resistor	56K 1/8W J 0805 TAPING	R38
024-680498-120	2	SMD resistor	6.8K 1/8W J 0805 TAPING	R135,166
Capacitors				
031-100244-100	4	SMD ceramic capacitor	0u01/50V K 0805 X7R TAPING	C108,118,131,140
031-100343-100	2	SMD capacitor	100pF/50V J 0805 NPO TAPING	C81,84
031-100344-100	6	SMD capacitor	0u1/50V K 0805 X7R TAPING	C75-78,82,85
031-180344-100	2	SMD capacitor	0u18/50V K 0805 X7R TAPING	C80,83
031-470244-102	4	SMD capacitor	0u047/50V K 0805 X7R TAPING	C93,94,101,124
031-560243-100	4	SMD capacitor	56pF/50V J 0805 NPO TAPING	C92,102,105,125
031-560343-102	1	SMD capacitor	560pF/50V J 0805 NPO TAPING	C79
034-100625-303	1	Electrolytic capacitor	100uF/25V M (R) P:2.5 TAPING	C117
034-100715-202	2	Electrolytic capacitor	1000uF/16V M (R) 10x17 P:5	C109,132
034-330615-301	1	Electrolytic capacitor	330uF/16V M (R)0812 P:3.5	C32
Semiconductors				
051-000600-100	1	NPN transistor	MPSW06RLRA TO-92 TAPING	Q31
051-222200-100	2	NPN transistor	PN:MPS2222ARLRA TO-92 TAPING	Q20,22
051-555100-000	2	NPN transistor	2N5551 TO-92 TAPING	Q21,23
053-211100-000	2	IC;DIP	PN:IR2111 HALF-BRIDGE DRIVER	U7,8
054-000100-100	2	SMD DIODE	ES1D 200V,1A,35ns TAPING	D35,43
054-001002-100	2	SMD ZENER DIODE	10V SOT-23 BZX84C10 TAPING	D42,49
054-007200-100	2	SMD IC	TL072CDR SO-8 (TI) TAPING	U9,10
054-033906-100	2	SMD TR (MOTOROLA)	MMBT3906LT1 SOT23 TAPING	Q34,35
054-050601-100	2	SMD ZENER DIODE	5.6V SOT-23 BZX84C5V6 TAPING	Z7,8
054-414803-100	6	SMD Diode	LL4148 TAPING	D36,39,46,52,60,61
054-540100-100	2	SMD PNP transistor	MMBT5401 LT1 TAPING	Q33,40
054-555100-100	1	SMD NPN transistor	MMBT5551 LT1 TAPING	Q32

Part Number	Qty	Description		Reference Designator
Miscellaneous				
072-040229-000	1	Header, Right Angle	PN:211-107-000-400 7PIN	PIN2
072-040230-000	1	Header, Right Angle	PN:211-111-000-400 11PIN	PIN1
Pre/Input PCB				
Resistors				
021-121598-100	1	metal film resistor	12K1 1/8W F TAPING	R204
021-121698-100	1	metal film resistor	121K 1/8W F TAPING	R214
021-301498-100	1	metal film resistor	3K01 1/8W F TAPING	R220
021-680498-100	2	metal film resistor	6K8 1/8W F TAPING	R208,209
024-000098-120	4	SMD resistor	0R 1/8W J 0805 TAPING	R301,302,303,309
024-100398-120	1	SMD resistor	100R 1/8W J 0805 TAPING	R249
024-100498-120	1	SMD resistor	1K 1/8W J 0805 TAPING	R238
024-100598-120	17	SMD resistor	10K 1/8W J 0805 TAPING	R202,205,222,225,227,229, 234,235,236,239,252,253, 254,257,217,262,228
024-100698-100	4	SMD resistor	100K 1/8W F 0805 TAPING	R219,218,200,201
024-137698-100	1	SMD resistor	137K 1/8W F 0805 TAPING	R213
024-150498-120	2	SMD resistor	1K5 1/8W J 0805 TAPING	R251,255
024-150598-120	1	SMD resistor	15K 1/8W J 0805 TAPING	R223
024-200598-120	1	SMD resistor	20K 1/8W J 0805 TAPING	R256
024-220798-120	1	SMD resistor	2M2 1/8W J 0805 TAPING	R244
024-240598-120	1	SMD resistor	24K 1/8W J 0805 TAPING	R224
024-270498-120	1	SMD resistor	2K7 1/8W J 0805 TAPING	R237
024-300398-120	1	SMD resistor	300R 1/8W J 0805 TAPING	R258
024-300598-120	1	SMD resistor	30K 1/8W J 0805 TAPING	R260
024-330498-100	4	SMD resistor	3K3 1/8W F 0805 TAPING	R203,215,240,247
024-330598-120	1	SMD resistor	33K 1/8W J 0805 TAPING	R212
024-453598-100	1	SMD resistor	45K3 1/8W F 0805 TAPING	R207
024-470498-120	2	SMD resistor	4K7 1/8W J 0805 TAPING	R230,210
024-470698-120	1	SMD resistor	470K 1/8W J 0805 TAPING	R259
024-470798-120	1	SMD resistor	4.7M 1/8W J 0805 TAPING	R243
024-510398-120	1	SMD resistor	510R 1/8W J 0805 TAPING	R261
024-680598-120	2	SMD resistor	68K 1/8W J 0805 TAPING	R206,250
024-750798-120	1	SMD resistor	7M5 1/8W J 0805 TAPING	R241
024-820598-120	1	SMD resistor	82K 1/8W J 0805 TAPING	R263
Capacitors				
031-100244-100	3	SMD capacitor	0u01/50V K 0805 X7R TAPING	C12,13,224
031-100343-100	2	SMD capacitor	100pF/50V J 0805 NPO TAPING	C222,204
031-100344-100	7	SMD capacitor	0u1/50V K 0805 X7R TAPING	C227,232,233,229,234,235,230

Part Number	Qty	Description		Reference Designator
031-220244-101U	1	SMD capacitor	0u022/50V K 0805 X7R TAPING	C202
031-220344-100	2	SMD capacitor	220pF/50V J 0805 NPO TAPING	C210,200
031-470144-101	1	SMD capacitor	0u0047/50V K 0805 X7R TAPING	C219
031-680144-100	1	SMD capacitor	0u0068/50V K 0805 X7R TAPING	C212
033-200695-300	2	NP Electrolytic capacitor	200u/63V M (R)1326 P:5	C205,203
034-100525-301	1	Electrolytic capacitor	10uF/25V M (R) P:2 TAPING	C220
034-220525-300	4	Electrolytic capacitor	22uF/25V M (R) 5x11 P:2.5	C15,14,223,225
034-220625-300	1	Electrolytic capacitor	220uF/25V M (R)0812 P:5 TAPING	C221
038-100363-300	2	MPE capacitor P:5	0u1/100V J TAPING	C201,209
038-150393-300	2	MPE capacitor	0u15/63V J P:5 TAPING	C208,207
038-680393-300	1	MPE capacitor	0u68/63V J P:5 TAPING	C214
Semiconductors				
054-007200-100	6	SMD IC	TL072CDR SO-8 (TI) TAPING	U202,203,204,200,201,205
054-033904-100	2	SMD TR (MOTOROLA)	MMBT3904LT1 SOT23 TAPING	Q203,204
054-050601-100	1	SMD ZENER DIODE	5.6V SOT-23 BZX84C5V6 TAPING	D210
054-211400-100	1	SMD NPN Transistor	DTC114EK SMT3 TAPING	Q202
054-414803-100	12	SMD diode	LL4148 TAPING	D215,212,209,207,205,200, 201,202,203,204,216,217
072-040008-000	1	4P terminal housing	JS-1001-04	P4
072-040169-000	1	Connector	2 PIN JS-1001-2 P:2.5mm	CONN3
072-040250-000	1	Connector	7 PIN JS-1001-7 P:2.5mm	P2
		Copper wire	Jumper	In lieu of C206
Phone Jack PCB				
024-000098-120	2	SMD resistor	0R 1/8W J 0805 TAPING	R305,307
024-620398-120	2	SMD resistor	620R 1/8W J 0805 TAPING	R221,226
031-220344-100	2	SMD resistor	220pF/50V J 0805 NPO TAPING	C215,216
072-010100-000	2	Phone Jack	PN:JY-6313-01-340	J206,207
072-010101-000	1	RCA Jack	PN:RJ-1031-10-0300A	J205
072-040251-000	1	Header Right angle	PN:211-104-000-400 4PIN	
Toggle Switch PCB				
031-470144-101	1	SMD capacitor	0u0047/50V K 0805 X7R TAPING	C2G1
072-040252-000	1	HEADER Right Angle	PN:211-109-000-400 9PIN	
073-010021-000	1	Screw base	PN:PCB-2(M3) 4PIN	T3
074-030002-000	2	Toggle Switch	P/N L101	SW201,200
074-030018-000	1	Toggle Switch	PN:L103-T2-B4	SW202
Control Pot PCB				
021-301498-100	2	metal film resistor	3K01 1/8W F TAPING	R231,232

Part Number	Qty	Description		Reference Designator
026-200595-269	1	VR 20Kx2 FREQ	PN:RD163121R03D-20KBx2(EJ)	R233
026-500595-254	1	VR 50K LEVEL	P/N:RK163111R405-EJ	R216
038-100363-300	2	MPE capacitor P:5	0u1/100V J TAPING	C218,213
072-040251-000	1	Header, Right Angle	PN:211-104-000-400 4PIN	
072-040253-000	1	Header, Right Angle	PN:211-103-000-400 3PIN	
Fuse PCB				
039-220180-100	1	X2 capacitor 0u22/250V	18x16.5x8.5mm PN:XG275M224VHS2	CXAC1
043-324300-000	1	Inductor	324uH YT-10778	L13
072-040064-000	1	Terminal (PCB TYPE)	PC250(t=0.8),T250MA	TER4
072-040096-000	3	Terminal T187MA(PCB TYPE)	(t=0.8mm) PC187(0.8)	TER1,2,3
073-050001-000	2	Fuse Clip	P/N:CFFH1206	F1B1
091-000128-000	1	AC Line Fuse	T4A/250V 5x20mm	F1
Miscellaneous				
008-060302-032	4	Gasket	28x20mm t=5mm C4305	For X'FORMER
008-061215-000	1	Gasket	12x15 t=5mm CR	For Thermistor
008-062001-000	4	Gasket	196x10mm t=1mm	COVER(Front)x2,COVER(Rear)x2
008-063001-000	4	Gasket	320x10mm t=1mm	COVER(front)x2,COVER(Rear)x2
042-014107-000	1	Transformer 120V/60Hz	EI-125 YT-9313-1	Power
061-015002-000	2	Knob	P/N 446077(18teeth)D:15.1 H:14.5	Knob (P 400W) w/white indicator
061-100016-000	3	Nylon partition	PN:BCMS-8 L=8mm NYLON 66(UL)	For Power PCB
061-314002-000	2	Strain Relief	P/N SB4F-2	For PANEL,COVER
061-700035-000	2	Insulation sheet	PN:TO-220AWO	For Q11,15
061-700044-000	2	Mica	13x18mm TO-220	For Q13,17
063-010010-000	5	Bracket for Transistor	P/N:TRK-2	
063-332100-000	1	Front faceplate	12.83"x8.33" t=0.0984"	
063-332101-000	1	Plastic Amp Cover	12.83"x8.33"x3.93" ABS 94V0	
070-040011-210	5	screw	PMS;M3x10mm BLK(H) w/dble WASHER	For TRx5
070-040811-308	1	screw	M3x8mm zinc white	For Terminal
070-040866-504	5	screw	#6-32x1/4" zinc white	For PCB
070-040866-516	5	screw	#6-32x5/16" zinc white	For Bracket
070-040886-803	4	screw	8#-32x1/2" zinc white	For Transformer
070-540810-808	3	screw	3x8 zinc white	For Power PCB
070-900811-312	9	screw	PTS-4;3x12 zinc white	For RCAx1,BPx8
070-940831-412	4	screw	4x12mm zinc white	For COVERx4
071-060280-500	4	nut washer	8#-32 zinc plated 8.5 t=3m/m	For Transformer
071-100606-060	2	flat washer	PN:WS3-2 OD=6 ID=3.t=2mm nylon	For Q11,Q13
073-014044-000	1	Bracket	6.64"x3.50"x3.20" SPCC cadium plated	
074-020018-000	1	Rocker Switch (Power)	PN:RF1003-BB4-0	
082-022241-000	1	Wire #22 UL1007	L=410mm blk/wht XH2P+HWAFER	
082-072620-000	1	Wire #26 UL1007	L=200mm XH7Px2 blk+whtx6	

Part Number	Qty	Description		Reference Designator
086-021836-000	1	Double insulated cable	SPT-2 #18 12feet +T187	Power cord
181-911600-158	1	Wire #16AWG UL1007	blk L=720mm	
181-911622-148	1	Wire #16AWG UL1007	red L=720	
181-921600-000	1	BLKWire #16 UL1015	both ends T187 trans sleeve L:140mm	
181-921699-000	1	WHT Wire #16 UL1015	both ends T187 transp sleeve L:160mm	
LED Assy On the Cabinet				
050-011700-000	2	LED red/green	P/N:L-117EGW	LED1,2
083-022204-000	1	UL1007 #22	white, blk XH2P+5TT	
114-060200-000	1	Wire	35.6x16.8x1.6mm FR-4 dble side thru hole	

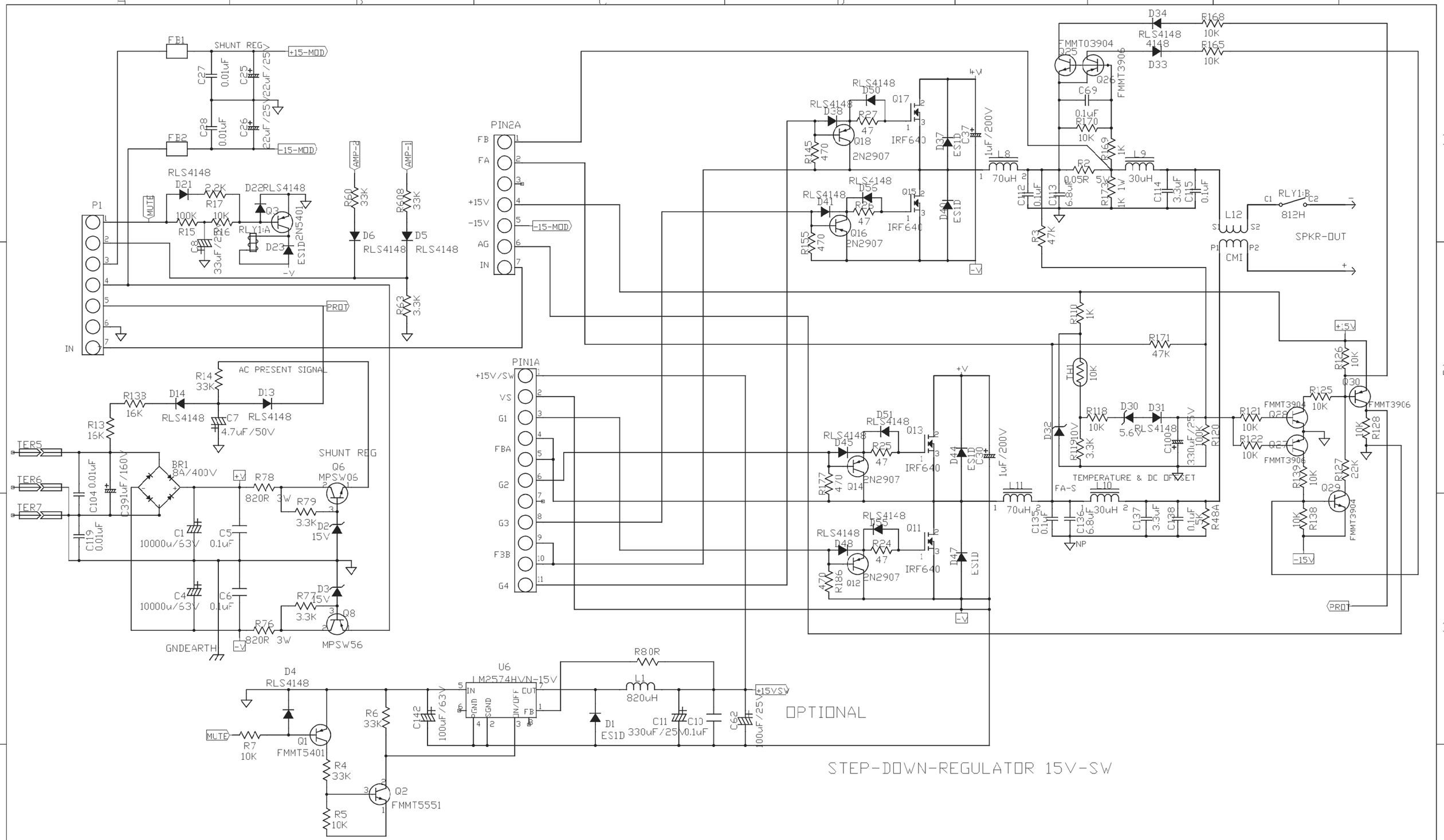

Rev:	Notes:	Date:	Rev:	Notes:	Date:	Draw by	Designed by	Checked by	Approved by	Customer: HARMAN
										P/N: 422-016:001-000
										Model no: S12P
										Sch name: CLASS D AMP PCB
										Issue no: ET-01-21-SCH-

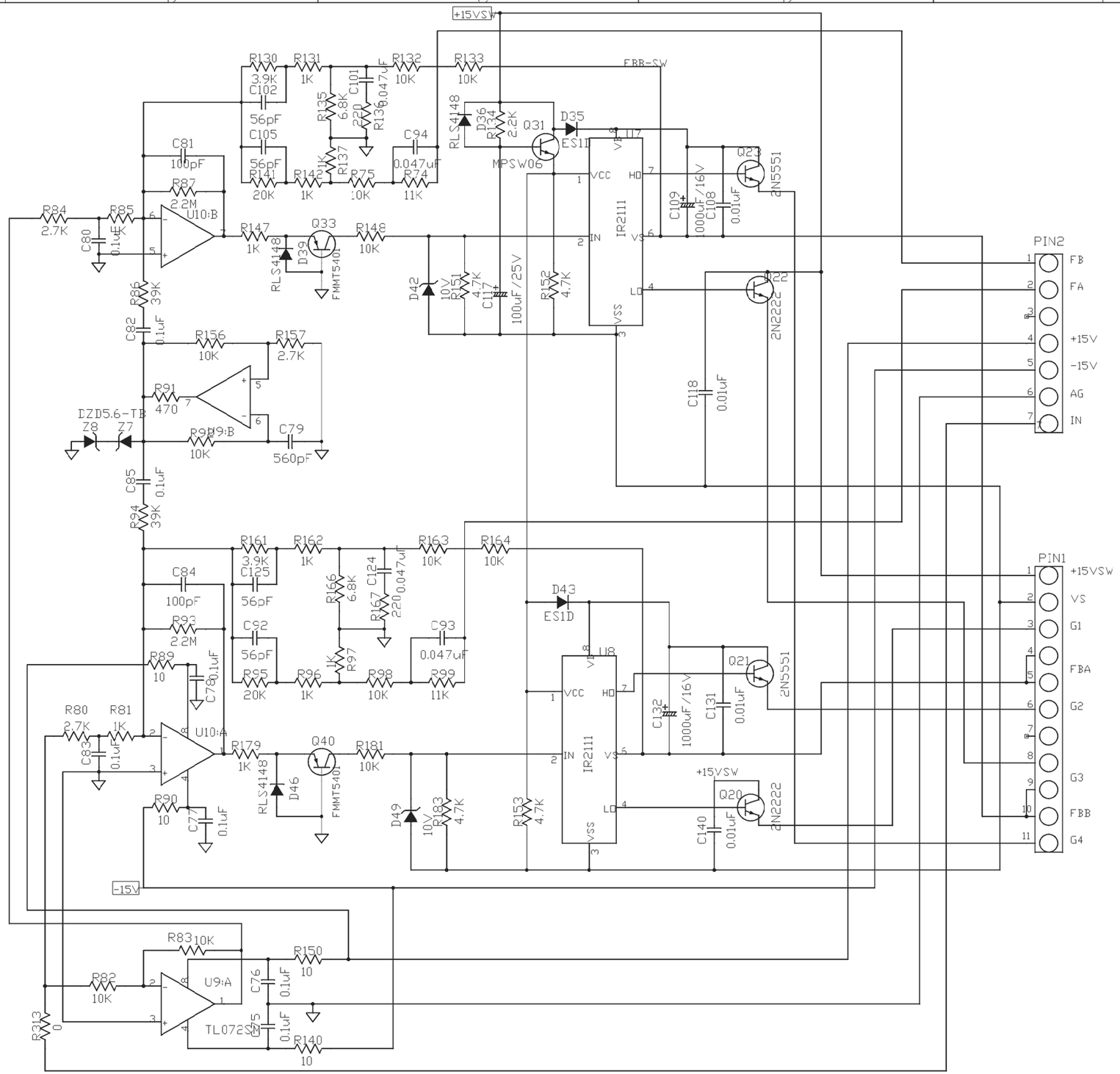

Rev:	Notes:	Date:	Rev:	Notes:	Date:	Draw by	Designed by	Checked by	Approved by	Customer: HARMAN
										P/N: 422-0161001-000
										Model no: S12P
										Sch name: CLASS D DRIVER PCB
										Issue no: ET-01-21-SCH-

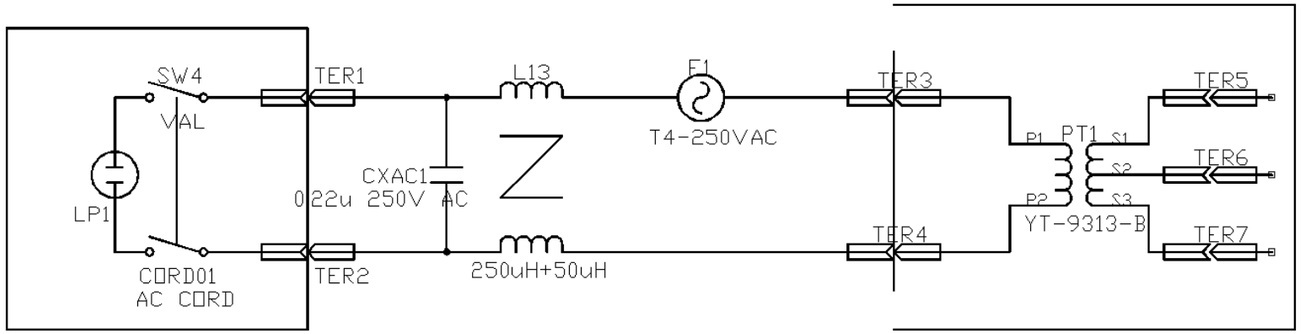

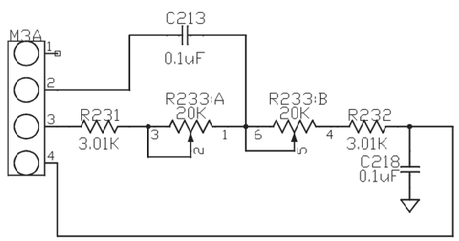

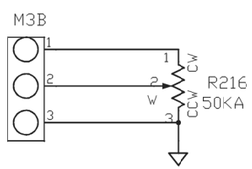

VR PCB

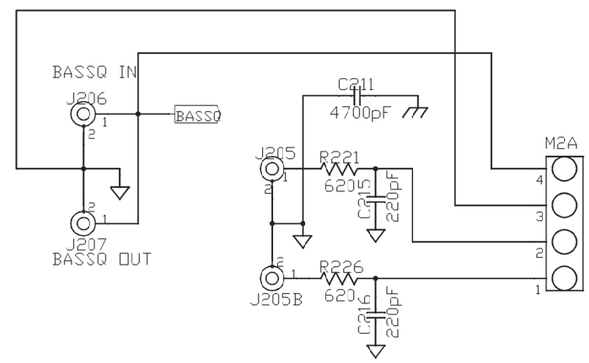

PHONE JACK PCB

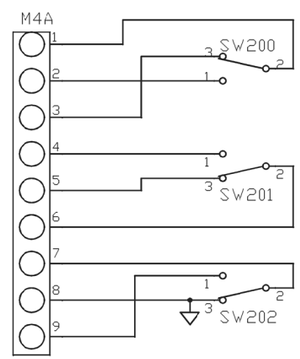

TOGGLE SW PCB

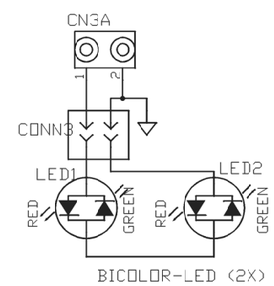

LED PCB

Rev:	Notes:	Date:	Rev:	Notes:	Date:	Draw by	Designed by	Checked by	Approved by	Customer: HARMAN
										P/N: 422-0161001-000
										Model no: S12P
										Sch name: SUB PCB
										Issue no: FI-01-21-SCH-

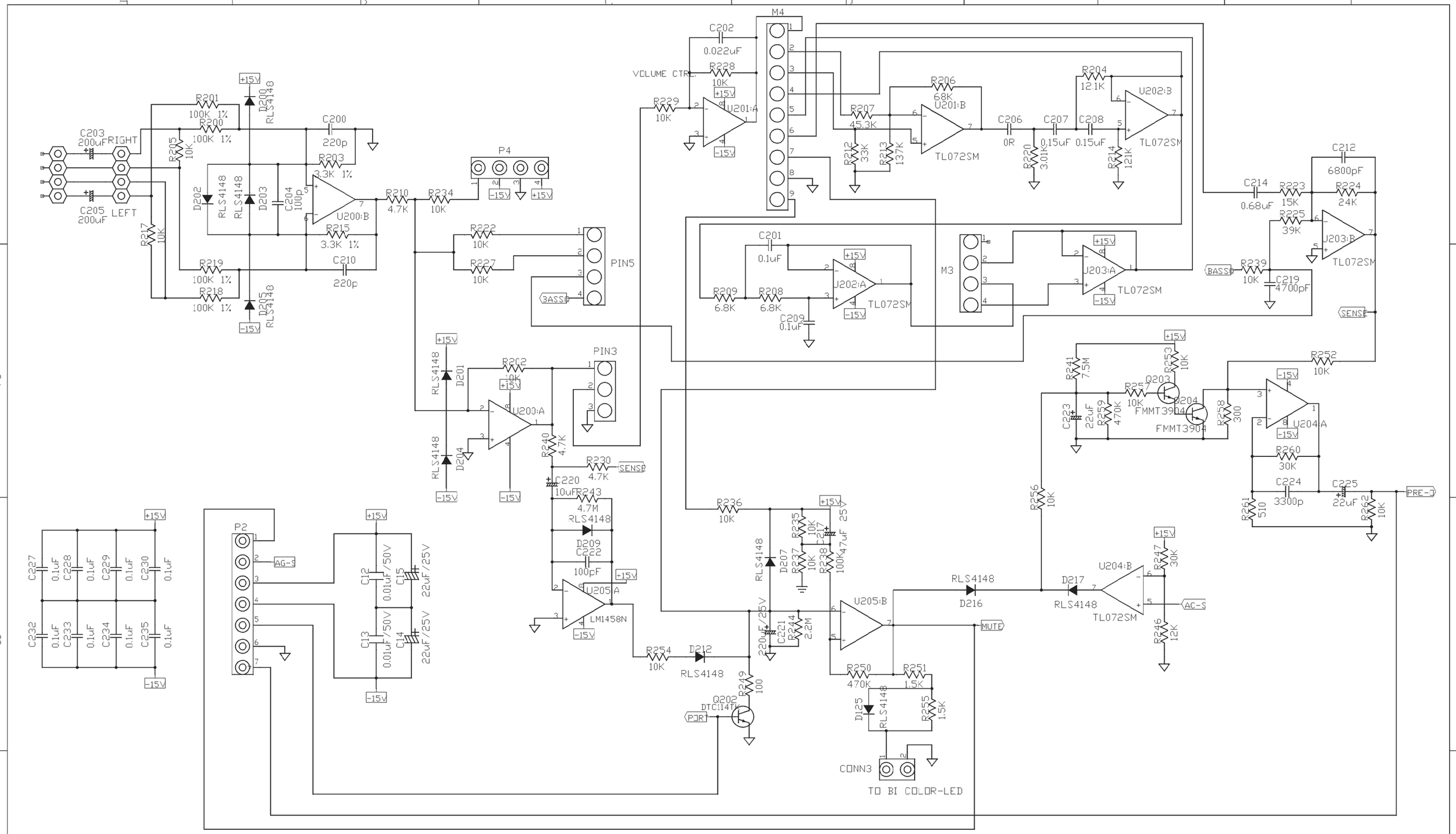

Rev:	Notes:	Date:	Rev:	Notes:	Date:	Draw by	Designed by	Checked by	Approved by	Customer: HARMAN
										P/N: 422-0161001-000
										Model no: S12P
										Sch name: PRE AMP PCB
										Issue no: ET-01-21-SCH-