BP600.1

1 CHANNEL
POWER AMPLIFIER

SERVICE MANUAL

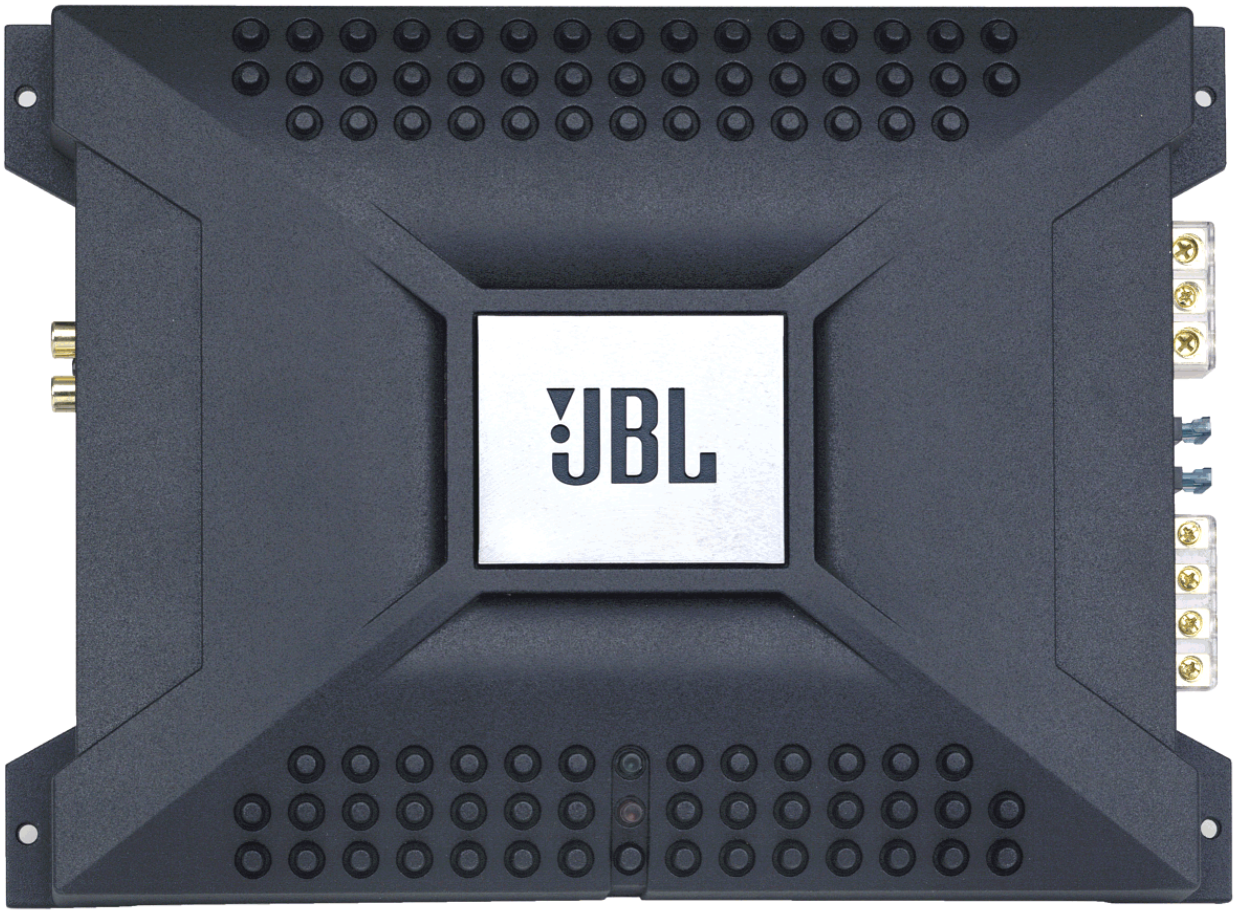

JBL Consumer Products
250 Crossways Park Dr.
Woodbury, New York 11797

Rev0 8/2004

CONTENTS

Specifications ……. ….....1
Features .....…….. …2
Test Conditions and Notes ....….....2
Controls and Connections ....….....…...3
Typical System Configuration (Wiring) ....….....4
Printed Circuit Boards (Top View).....…….. .....….....5
Electrical Parts List.....…... .....….....6
Mechanical Parts List.....…... .....….....8
Block Diagram..... .....….....9
Bulletin JBL2000-04.....…... .....….....10
Packaging .....…… .....….....11
Integrated Circuit Diagrams..... .....….....12
Transistor Diagrams..... .....….....14
Exploded View..... .....….....15
Schematic Diagrams..... ….....….....……...16

BP600.1 Specifications

Number of Channels . . . . . ……... . 1
4 Ohms Stereo. . . . . ……. . . 300W
2 Ohms Stereo . . . . . ……. . ….. 600W
T.H.D. @ 4 Ohms rated Power 0.10%
Frequency Response . . . . …. . . . 10Hz ~ 320 Hz
Signal to noise Ratio . . . . . …. . . . . >90dB
Maximum Current Draw . …….. . . . 57A
Fuse size. . . . . ……. . . . 30A x 2
Input Sensitivity. . ……... . . . . ……. . . 250mV ~ 4V
Minimum Speaker Impedance……..1 ohm
External Dimensions
Length . . . . . ……... . ..12 9/16” (319mm)
Width . . . . . 9 1/16” (229mm)
Depth 2 11/16 (68mm)

JBL continually strives to improve its products. New materials, production methods and design refinements are introduced into existing models without notice as a routine expression of our design philosophy. For this reason, BP Series Automotive Amplifiers may differ in some respects from their published specifications and descriptions, but will always equal or exceed the original specifications unless otherwise stated.

Features

- 1-Channel Operation
- Advanced MOSFET Oversized Floating Rail Power Supply
- Floating Ground Factory - Head - Unit Speaker - Level input
- Variable Input Sensitivity (250mV - 4V)
- Fully Complementary Output Stage with Class-A Voltage Amplification
- Gold-plated Power, Input and Output Connectors
- 2-Ohm Stable

Test Conditions and Notes

- All tests to be done, unless otherwise specified, from 10Hz to 320Hz at 14.4V DC into 4 ohm loads and the units gain so that with a .775 volt input signal the unit is at its maximum rated output. All meas will be done using an Audio precision system one and the supply voltage.

- An A+ line voltage of 14.4V DC shall be applied to the unit under test for all measurements unless oth specified. The voltage applied to the unit shall be measured at the power connection On the Amplifier.

- Signal Source
  Unless otherwise specified, all tests shall be conducted with the Audio Signal Generator output config be balanced, less than or equal to 50 ohm source impedance, and floating. The signal source "GND" sha connected to the Amplifier PWR GND at the Amplifier.

- Output Load
  Unless otherwise specified, all tests shall be conducted with 4 ohm resistive loads having less than 1 reactive components at any frequency below 75KHz. Each resistor shall have a value that remains within 1% while dissipating the rated output of the unit under test.

- Power Indicator LED steadily illuminates for normal operation. LED blinks when protection circuitry is engaged, and during power up.

Controls and Connections

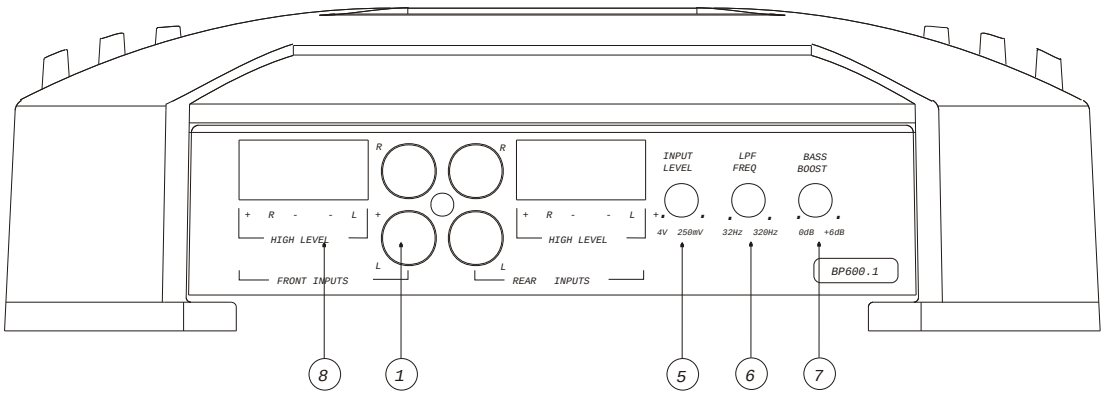

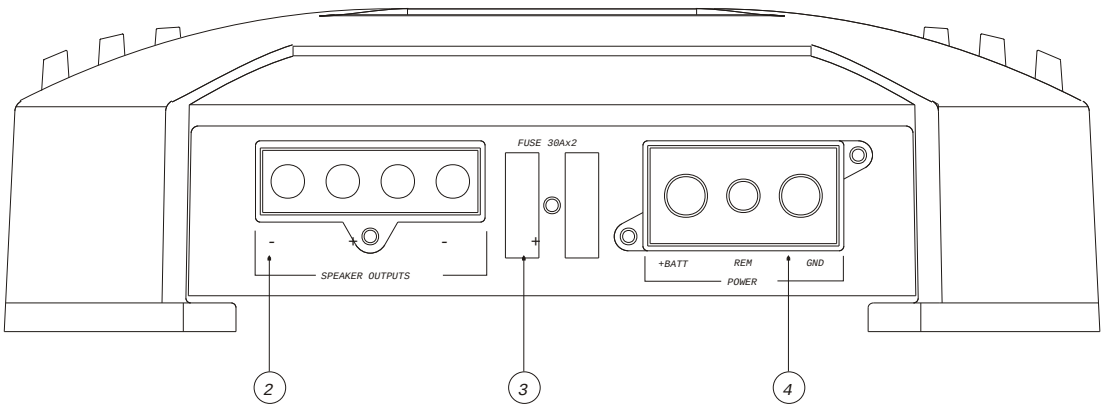

Controls and Connections

1. It allows left and right input channels to be connected to the amplifier using RCA plugs.

2. Speaker Output Connector - Connect speaker wiring to these connectors. See wiring instructions on page 4 for more information.

3. Fuse - Two 30 Amp ATC type Fuses.

4. Power Connection for 12V+, GND and REM connections for power wires. See wiring instructions on page 4 for more information.

5. Input-Level Control - Adjusts input sensitivity for pre-amp level and speaker level inputs.

6. The electronic crossover is a 12dB/oct. Low pass filter which can be Set at any frequency between 32Hz and 320Hz.

7. The bass boost control will provide up to 6dB of boost at 50Hz.

8. It allows left and right input channels such as high l speaker output signals to be the ampifier.

Mounting the Amplifier

The JBL BP Series amplifiers can be mounted in virtually any location inside the vehicle. However, make sure to keep the amplifier away from heater vents or ducts.

1. At the chosen site, use the amplifier as a mounting template and mark the locations of the four mounting holes.

2. Drill a small pilot hole at each marked location.

3. Mount the amplifier and securely tighten the mounting screws.

Typical System Configuration

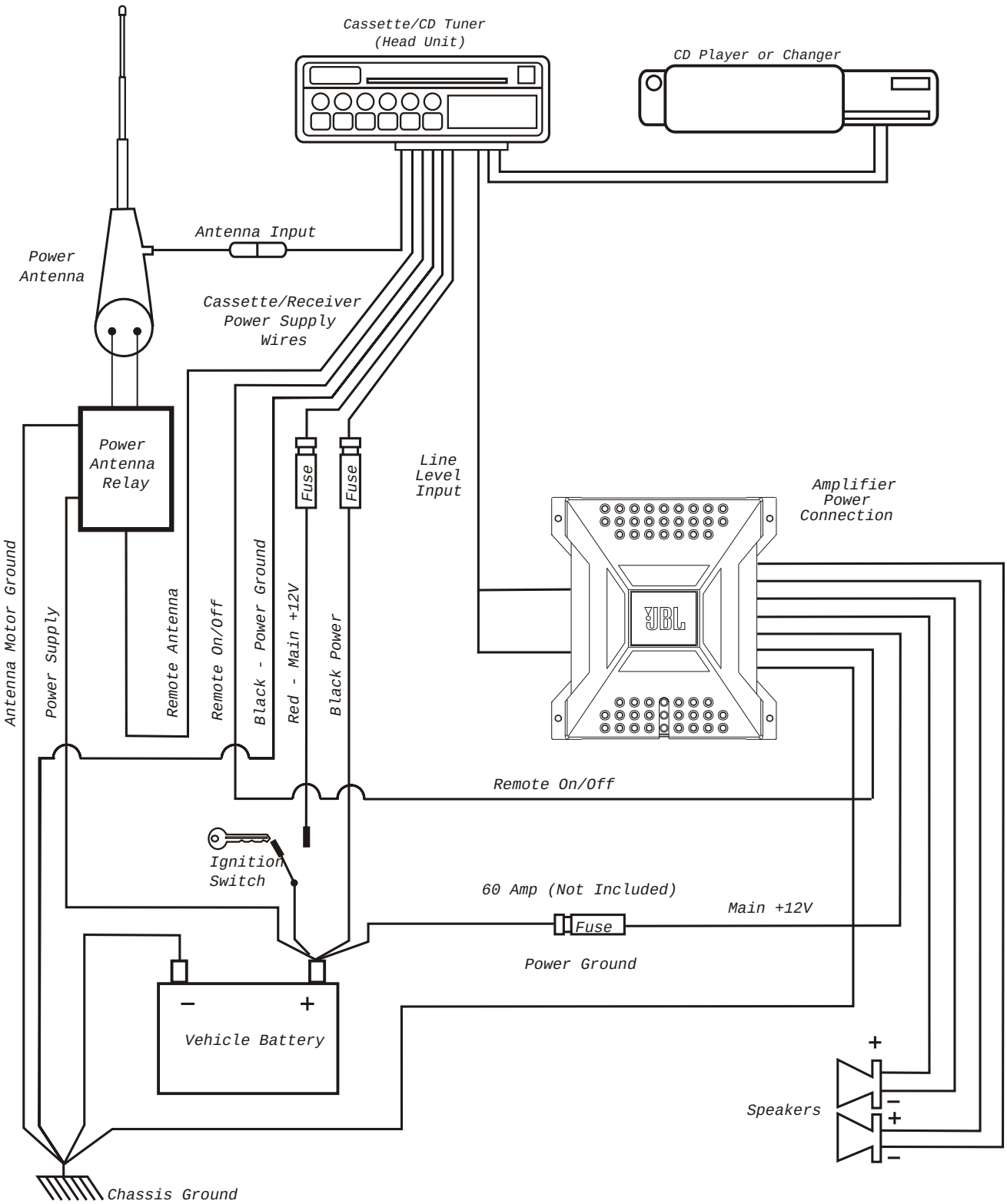

Printed Circuit Board (Top View)

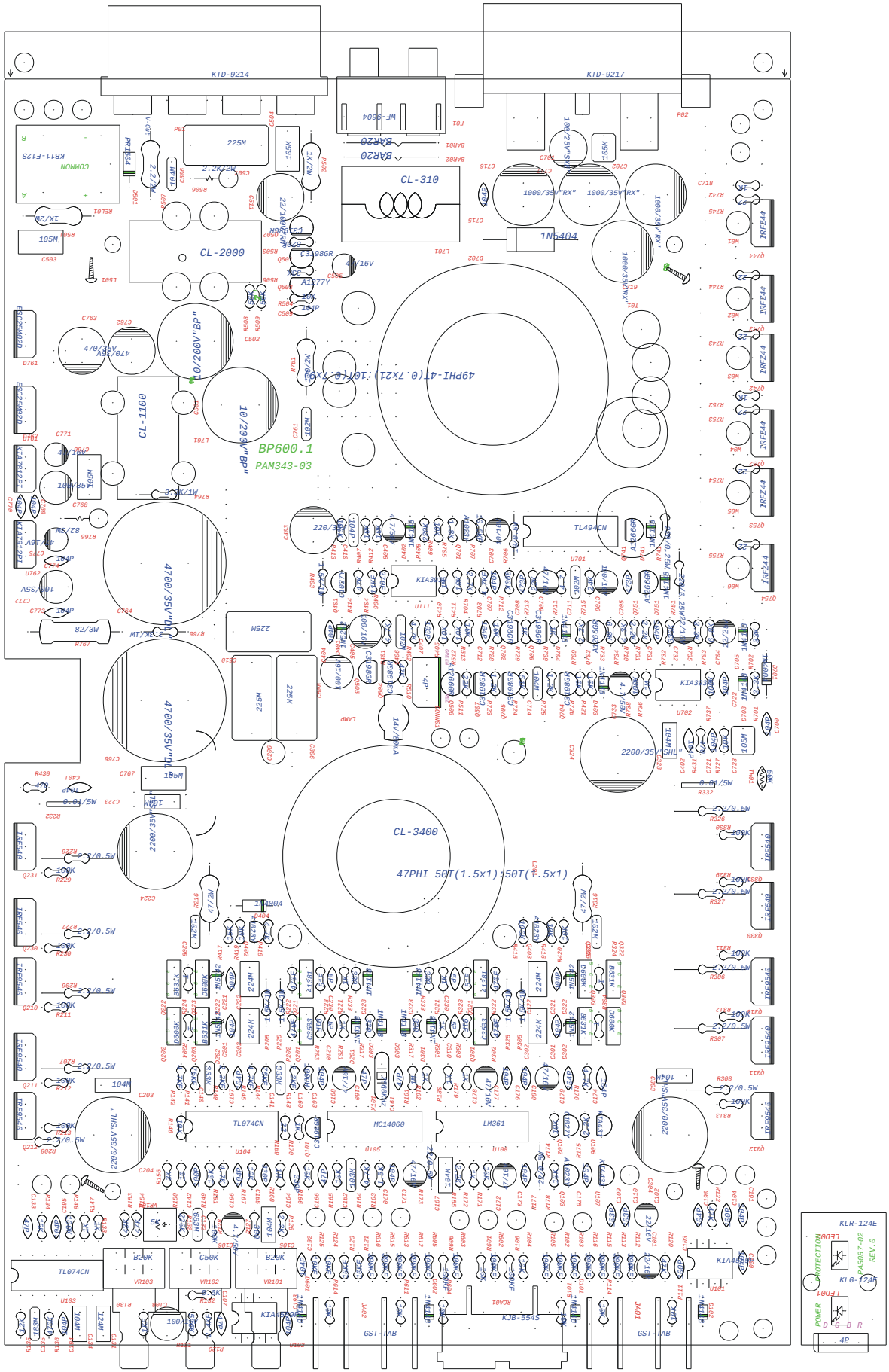

BP600.1 Parts List

Main PCB, Preamp, Crossover, Power Supply and Power Amplifier

REF. NO	PART NO.	DESCRIPTION	Q'TY
F.E.T			
Q210,211,212 Q310,311,312	FE195400000	P-CH POWER MOSFET (IRF9540)	6
Q230,231,330 Q331	FE105400000	N-CH POWER MOSFET (IRF540)	4
Q742,743,744 Q752,753,754	FE100440112	N-CH POWERMOSFET (IRFZ44)	6
TRANSISTORS			
Q101,501,502 Q504,505,507 Q702,704,705 Q706	TR031981100	SMALL SIGNAL NPN (KTC3198GR)	10
Q102,401	TR010273100	SMALL SIGNAL NPN (KTC1027Y)	2
Q103,402,403 Q701	TR010233100	SMALL SIGNAL PNP (KTA1023Y)	4
Q201,301	TR035030101	VIDEO NPN (C3503)	2
Q202,223,302 Q323	TR006003126	SMALL SIGNAL NPN (D600K)	4
Q203,222,303 Q322	TR006313126	SMALL SIGNAL PNP (B631K)	4
Q221,321	TR013810201	VIDEO PNP (A1381)	2
Q503,506,703 Q741,751	TR012661200	SMALL SIGNAL PNP (KTA1266GR)	5
DIODES			
D101,102,201 D203,223,301 D303,323,402 D403,601,602 D703,704,705 D741,751	DI041480000	SWITCHING SIGNAL (1N4148)	17
D202,222,302 D322,401	DI052420040	ZENER 12V/0.5W (1N5242)	5
D404,701	DI040040010	RECTIFIER (1N4004)	2
D501	DI001504111	FAST RECOVERY (PR1504)	1
D702	DI054040011	FAST RECOVERY (1N5404)	1
D761,762	DI002502031	FAST RECOVERY (ESC25M02D)	2
I.C			
U101,102	IC007455900	DUAL OP AMP (DIP-08) (KIA4559P)	2
U103,104	IC017007400	QUAD OP AMP (DIP-14) (TL074CN)	2
U105	IC009140600	14-STAGE COUNTER (DIP-16) (MC14060)	1
U106,107	IC051043100	SHUNT REGULATOR (KIA431)	2
U108	IC007036100	PRECISION (DIP-16)-LM361	1
U111,702	IC001039300	COMPARATOR (DIP-08) (KIA393P)	2
U701	IC017049400	P.W.M IC (TL494CN)	1
U761	IC006781204	VOTAGE REGULATOR +12V/0.5A (KIA7812PI)	1
U762	IC006791204	VOLTAGE REGULATOR, -12V/0.5A (KIA7912PI)	1

REF. NO	PART NO.	DESCRIPTION	Q'TY
RESISTORS			
R101,104,111 R114,146,149 R165,166,167 R171,174,178 R405,407,409 R411,412,416 R419,420,421 R504,512,513 R601,604,611 R614,726,727 R728	RE202010300	CARBON FILM 1/5W 5% (10K OHM)	31
R102,103,105 R106,602,603 R605,606	RE212100300	METAL FILM 1/5W 1% (100K OHM)	8
R112,113,115 R116,612,613 R615,616	RE212390300	METAL FILM 1/5W 1% (390K OHM)	8
R120,122,154 R414,510	RE202047300	CARBON FILM 1/5W 5% (47K OHM)	5
R121,123,124 R125	RE212010300	METAL FILM 1/5W 1% (10K OHM)	4
R126,155,175 R709,710	RE202022200	CARBON FILM 1/5W 5% (2.2KOHM)	5
R127,163	RE202015200	CARBON FILM 1/5W 5% (1.5K OHM)	2
R128,148,211 R212,213,229 R230,311,312 R313,329,330 R413,415,737 R738	RE202100300	CARBON FILM 1/5W 5% (100KOHM)	16
R129	RE212043200	METAL FILM 1/5W 1% (4.3K OHM)	1
R130	RE212001300	METAL FILM 1/5W 1% (1K OHM)	1
R131,132	RE202056200	CARBON FILM 1/5W 5% (5.6K OHM)	2
R133,147,162 R170,172,179 R180,201,221 R301,321,729 R739,742,752	RE202001300	CARBON FILM 1/5W 5% (1K OHM)	15
R134,417	RE202015300	CARBON FILM 1/5W 5% (15K OHM)	2
R135	RE202012300	CARBON FILM 1/5W 5% (12K OHM)	1
R136	RE202470300	CARBON FILM 1/5W 5% (470K OHM)	1
R140,143	RE212022200	METAL FILM 1/5W 1% (2.2K OHM)	2
R141,144	RE212075300	METAL FILM 1/5W 1% (75K OHM)	2
R142,145,708	RE212047200	METAL FILM 1/5W 1% (4.7K OHM)	3
R150	RE202010000	CARBON FILM 1/5W 5% (10 OHM)	1
R151,164,176 R401,402,418	RE202047200	CARBON FILM 1/5W 5% (4.7K OHM)	6
R152,408	RE202220300	CARBON FILM 1/5W 5% (220K OHM)	2
R153	RE202043300	CARBON FILM 1/5W 5% (43K OHM)	1
R156	RE202003300	CARBON FILM 1/5W 5% (3K OHM)	1
R161,168,410 R736	RE202010500	CARBON FILM 1/5W 5% (1M OHM)	4
R169,743,744 R745,753,754 R755	RE202022000	CARBON FILM 1/5W 5% (22 OHM)	7
R173,177	RE204022000	CARBON FILM 0.5W 5% (22 OHM)	2
R202,222,302 R322	RE212470000	METAL FILM 1/5W 1% (470 OHM)	4
R203,303	RE212091000	METAL FILM 1/5W 1% (91 OHM)	2
R204,224,304 R324	RE202001000	CA RBON FILM 1/5W 5% (1 OHM)	4
R206,207,208 R226,227,306 R307,308,326 R327	RE314022000	METAL FILM 0.5W 1% (2.2 OHM)	10

BP600.1 Parts List

REF. NO	PART NO.	DESCRIPTION	Q'TY
CAPACITORS			
R205,225,305 R325,403	RE305015201	CARBON FILM 1W 5% (1.5K OHM)	5
R216,316	RE306047000	METAL FILM 2W 5% (47 OHM)	2
R217,233,317 R333	RE202330000	CARBON FILM 1/5W 5% (330 OHM)	4
R223,323	RE212051000	METAL FILM 1/5W 1% (51 OHM)	2
R232,332	RE908010013	SHUNT 5W 5% (0.01 OHM)	2
R404	RE212011300	METAL FILM 1/5W 1% (11K OHM)	1
R406	RE212330000	METAL FILM 1/5W 1% (270 OHM)	1
R430,431	RE202470000	CARBON FILM 1/5W 5% (470 OHM)	2
R501,502	RE306001300	METALFILM 2W 5% (1K OHM)	2
R503	RE202820300	CARBON FILM 1/5W 5% (820K OHM)	1
R505,702	RE202033300	CARBON FILM 1/5W 5% (33K OHM)	2
R506	RE306022200	METAL FILM 2W 5% (2.2K OHM)	1
R507	RE306022800	METAL FILM 2W 5% (2.2 OHM)	1
R508,509	RE202056300	CARBON FILM 1/5W 5% (56K OHM)	2
R511,713	RE202022300	CARBON FILM 1/5W 5% (22K OHM)	2
R701,735	RE202033200	CARBON FILM 1/5W 5% (3.3K OHM)	2
R703,733	RE202068200	CARBON FILM 1/5W 5% (6.8K OHM)	2
R704	RE202027200	CARBON FILM 1/5W 5% (2.7K OHM)	1
R705	RE202018200	CARBON FILM 1/5W 5% (1.8K OHM)	1
R706	RE204010000	CARBON FILM 0.5W 5% (10 OHM)	1
R707	RE212105200	METAL FILM 1/5W 1% (10.5K OHM)	1
R711	RE202044800	CARBON FILM 1/5W 5% (4.7 OHM)	1
R712	RE202390300	CARBON FILM 1/5W 5% (390K OHM)	1
R715	RE202024300	CARBON FILM 1/5W 5% (24K OHM)	1
R723,725	RE202012200	CARBON FILM 1/5W 5% (1.2K OHM)	2
R724	RE202051300	CARBON FILM 1/5W 5% (51K OHM)	1
R731	RE202022500	CARBON FILM 1/5W 5% (2.2M OHM)	1
R732	RE202330300	CARBON FILM 1/5W 5% (330K OHM)	1
R734	RE202043200	CARBON FILM 1/5W 5% (4.3K OHM)	1
R741,751	RE203220000	CARBON FILM 0.25W 5% (220 OHM)	2
R761	RE306100000	METAL FILM 2W 5% (100 OHM)	1
R764,765	RE305033201	CARBON FILM 1W 5% (3.3K OHM)	2
R766,767	RE307082010	METAL FILM 3W 5% (82 OHM)	2
CAPACITOR			
C103,104,142	CC011101100	CERAMIC DISK 50V "NPO" (100pF)	3
C107,133,160 C161,166	CC011470100	CERAMIC DISK 50V "NPO" (47pF)	5
C109,110,407	CC011103600	CERAMIC DISK 50V (0.01uf)	3
C163,170,173 C174,175,176 C177,179,190 C191,192,193 C194,195,196 C197,201,221 C301,321,401 C402,404,509 C707,712,715 C721,722,731 C769,770,773 C774	CC011104600	CERAMIC DISK 50V (0.1uf)	34
C164,165	CC011331200	CERAMIC DISK 50V (330pF)	2
C210,230,310 C330	CC011050100	CERAMIC DISK 50V "NPO" (5pF)	4
C410	CC051104020	RADIAL MLCC (0.1uf)	1
C705,708	CC011473500	CERAMIC DISK 50V (0.47uf)	2
C105,134,167 C203,223,303 C323,506,714	MC091410407	MYLAR 5% 63V "TL TYPE" (0.1uf)	9
C131	MC091412407	MYLAR 5% 63V "TL TYPE" (0.12uf)	1
C132	MC091468307	MYLAR 5% 63V "TL TYPE" (0.068uf)	1
C135	MC091418307	MYLAR 5% 63V "TL TYPE" (0.018uf)	1
C140,141	MC091433307	MYLAR 5% 63V "TL TYPE" (0.033uf)	2
C162	MC001110300	MYLAR 5% 50V (0.01uF)	1
C202,222,302 C322	MC001422401	MYLAR 5% 63V "BOX TYPE" (0.22uf)	4
C205,305,406 C711,761	MC001110200	MYLAR 5% 50V (0.001uF)	5
C206,306,507 C510	MC001222511	MYLAR 5% 100V "BOX TYPE" (2.2uf)	4
C503,504,766 C767	MC001410530	MYLAR 5% 63V "BOX TYPE" (1uf)	4
C702,723	MC091410507	MYLAR 5% 63V "TL TYPE " (1uf)	2
C101,102,732	EC040112200	ELECTROLYTIC "SMS" (22uF/16V)	3
C106,408,733	EC070114760	ELECTROLYTIC "SMS" (4.7uF/50V)	3
C108,405,508 C706	EC040111010	ELECTROLYTIC "SMS" (100uF/16V)	4
C168,171,172 C178,180,505 C709,771,775	EC040114700	ELECTROLYTIC "SMS" (47uF/16V)	9
C204,224,304 C324	EC060122220	ELECTROLYTIC "SHL" (2200uF/35V)	4
C403	EC060112210	ELECTROLYTIC "SMS" (220uF/35V)	1
C501,502	EC111211000	ELECTROLYTIC "BP" (10uF/200V)	2
C511	EC091132200	ELECTROLYTIC "RN" (22uF/100V)	1
C701	EC050171010	ELECTROLYTIC "SXE" (100uF/25V)	1
C703	EC040111600	ELECTROLYTIC "SMS" (10uF/16V)	1
C704	EC050112200	ELECTROLYTIC "SMS' (22uF/25V)	1
C716,717,718 C719	EC061311021	ELECTROLYTIC "RX" (1000uF/35V)	4
C762,763	EC060114710	ELECTROLYTIC "SMS" (470uF/35V)	2
C764,765	EC060064721	ELECTROLYTIC "DL" (4700uF/35V)	2
C768,772	EC060111010	ELECTROLYTIC "SMS" (100uF/35V)	2
MISCELLANEOUS			
L160	IN012100500	AXIAL 5% (100uH)	1
REL01	RL001211020	RELAY (KB11-E12S)	1
VR102	VO112503512	VOLUME	1
VR101,103	VO112203510	VOLUME	2
VR104	VO131502270	SEMI VOLUME	1
TH01	TH100500010	FTD5-350	1
P01	TE000921400	TERMINAL (KTD-9214)	1
P02	TE000921700	TERMINAL (KTD-9217)	1

BP600.1 Parts List

REF. NO	PART NO.	DESCRIPTION	Q'TY
F01	FH000960402	FUSE HOLDER(WF-9604)	1
RCA01	JA020554000	RCA JACK (KJB-554S)	1
T01	TF149041065	RING CORE	1
L201,301	IN027550610	INDUCTOR (CL-2400)	2
L501	AR110290900	COIL (CL-2000)	1
L761	AR412231500	IRON 23PHI (CL-1100)	1
L701	AR200003100	BAR COIL (CL-310)	1
BAR01,02	JU100001501	BAR JUMPER (20m/m)	2
JA01(4),02(4)	MATB6510430	NI PLATED	8
LAMP	DS501408010	NEO WEDGE TYPE-14V/80mA	1
CONN01	CN001040001	LWL-0640-04	1
TH01	TB001000100	TEFLON TUBE(10m/m)	2
IC,FET,DIODE	mP010010000	PAPER SPACE	20
FUSE	FU030120301	30A ATC FUSE	4
LED01	DI000124471	KLG-124E	1
LED02	DI000124371	KLR-124E	1
CONN02	WI120312003	WIRE ASS'Y	1
X101	XR300256000	CRYSTAL (CSA256MG)	1

MECHANICAL

REF. NO	PART NO.	DESCRIPTION	Q'TY
HEAT SINK	MAHS6510791	AL/DIECASTING 318.2x229.1x67.5	1
FRONT PANEL	MAFP6537840	EGI 1.5t	1
REAR PANEL	MARP6537850	EGI 1.5t	1
BOTTOM COVER	MABC6528050	AL, 282.2x218x1.5t	1
BADGE	MABG6510220	AL, 76.4x61.8x4t	1
REFLECTOR	MAIL6510230	ACRYL/ORANGE 109x75.2x20.0	1
LED CAP	MAIL6510240	ACRYL/CLEAR	1
T.R BRACKET (D) "1063D"	MABR0210630	AL/BAR, 85x14x6.5	3
T.R BRACKET (E) "1064E"	MABR0210640	AL/BAR, 56.5x14x6.5	1
T.R BRACKET CUSHION (D)	MOCU0110720	FIBER 85x14x1.5t	3
T.R BRACKET CUSHION (E)	MOCU0110730	FIBER, 56.5x14x1.5t	1
SILICON PAD (C)	MASP0110781	SP1000, 88x23x0.3t	3
SILICON PAD (D)	MASP0110831	SP1000, 60x23x0.3t	1
RUBBER CUSHION (A)	MOCU0140970	RUBBER 12x7x1.6t	1
RUBBER CUSHION (C)	MOCU0111140	RUBBER, PHI 18x10t	2
RUBBER CUSHION (F)	MOCU0111260	RUBBER, PHI 18x6t	3
SCREW	MNSC0023008	SMB 3x8 (NI-P)	2
SCREW	MNSC0053008	SMB 3x8 NI "W/W"	2
SCREW	MNSC0053006	SMB 3x6 (NI- P) "W/W"	4
SCREW	MBSC0023006	SMB 3x6 BK	6
SCREW	MBSC0323008	STT3 BH 3x8 BK	4
SCREW	MBSC0323008	STT2 PH 3x8 BK	5
SCREW	MNSC0034016	SMP 4x16 (NI-P)	11
SCREW	MNSC0034056	SMP 4x56 (NI-P)	1
NUT	MONU0446320	M4 (NI-P)	1
PLAIN WASHER	MOPL0110910	PHI 4.2 x PHI 15x1t	2
PAPER WASHER	MOWA0110920	PAPER, PHI 4.2xPHI 18x0.5t	2
	SIL-32-010-A0	SILICON PAD FOR TO-220 DEVICES	20

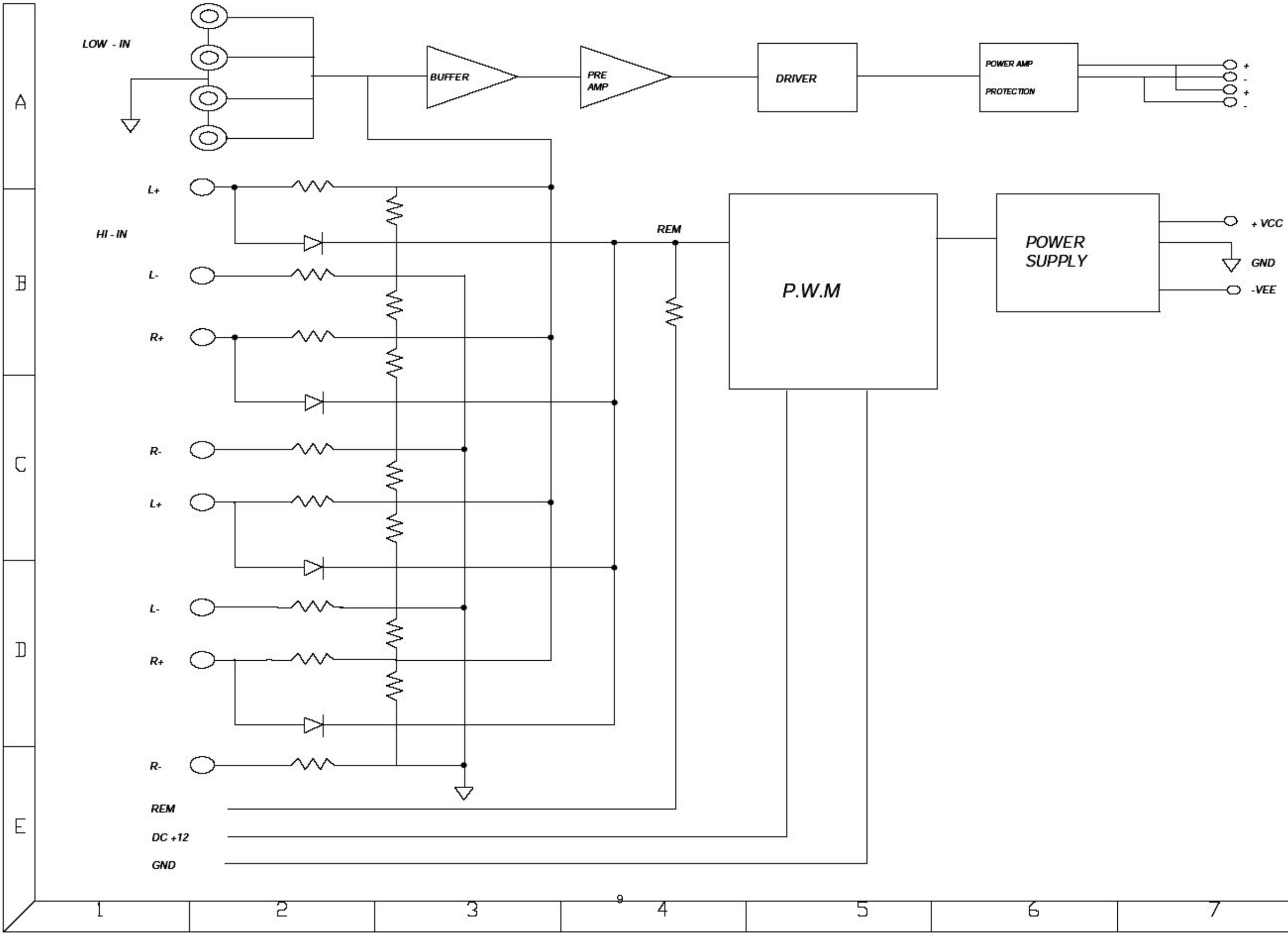
LOW - IN
BUFFER
PRE AMP
DRIVER
POWER AMP
PROTECTION
+
-
+
-
HI - IN
L+
L-
R+
R-
L+
L-
R+
R-
REM
P.W.M
POWER SUPPLY
+ VCC
GND
-VEE
REM
DC +12
GND
A
B
C
D
E
1
2
3
4
5
6
7

Service Bulletin

Service Bulletin JBL2000-04 - November 2000 | Warranty labor rate: MINOR

To: All JBL Service Centers

Models: BP300.1, BP600.1, BP1200.1

Subject: Muting during intense bass passages

The JBL BP series amplifier is designed with the following protection circuits:
Thermal (excess heat)
DC voltage on the output terminals (overdriving or “clipping”)
Short Circuit (excessive current)

Under certain large signal conditions during intense bass passages, the unit will go into protection. These amplifiers are behaving as designed. As the unit is driven into hard clipping, the protection circuit found in BP Series amps was engineered to protect your loudspeakers from being destroyed by a severely clipped output signal. This can be remedied easily by turning the volume down somewhat on your music source.

In the event you receive a BP series amplifier with the complaint: “Under a large signal input, with music that is composed of high-level bass, the amplifier mutes for 2-3 seconds, and then returns to normal operation”, the following modification will effectively increase the amount of clipping that is allowed to occur before the protection circuit engages by increasing the threshold at which the amplifier mutes - for the benefit of customers who use the amps in SPL competition, or for customers who insist on driving the amplifiers into this potentially hazardous zone.

1) Turn the amplifier upside-down and remove the Phillips screws holding the bottom cover on.
2) Locate and change R510 from 47K to 4.7K ohms 1/5W (JBL part# RE212047200).
3) Locate and change R511 from 22K to 2.2K ohms 1/4W (JBL part# QAF0450-222).
4) If it is not already present, add new part - 4.7uf 50v electrolytic capacitor (JLB part# EC070114760) in parallel with R511. Polarity: The negative side of the capacitor must be connected to the junction of R510/R511, which can be discovered with an ohmmeter.

NOTE: Using the correct soldering techniques, you should be able to make these changes from the top of the PCB without its removal.

5) Replace bottom cover; test amplifier

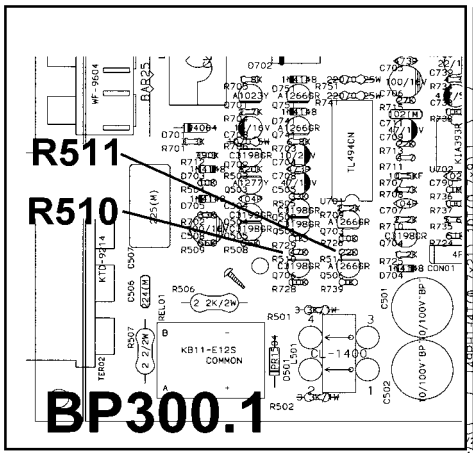

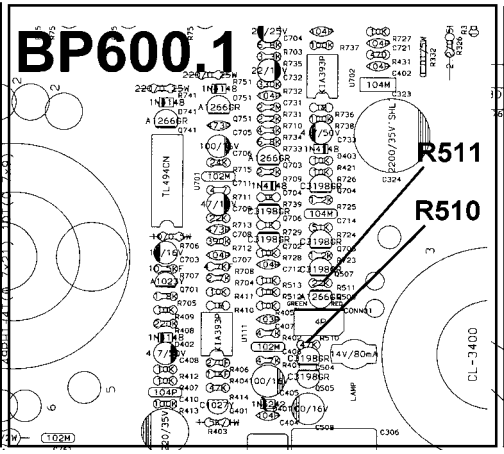

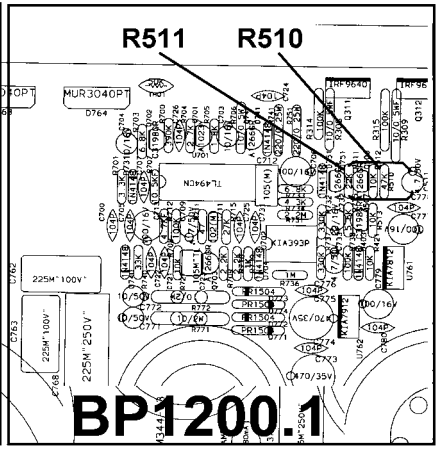

Model	Serial number	Status	Action
BP300.1 BP600.1 BP1200.1	All Serial numbers affected	Modify if Needed	Change R510 from 47K to 4.7K ohms Change R511 from 22K to 2.2K ohms Add 4.7uf 50v electrolytic cap in parallel with R511

Packaging Exploded View

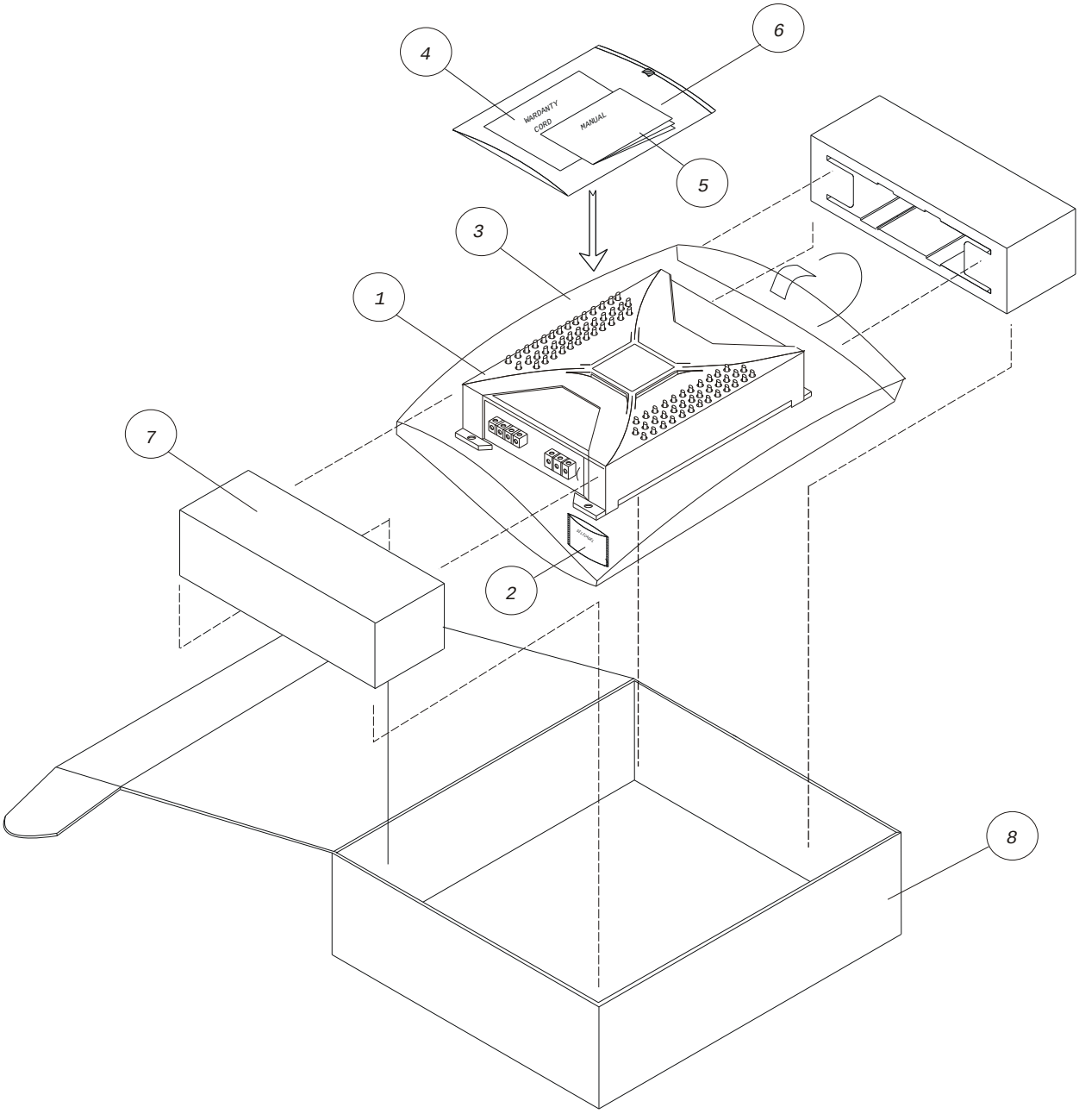

* PACKAGE *

1	BP600.1	SET	1	5	MOMA0147091	MANUAL	1
2	MOSG0147100	SILICAGEL	1	6	MAPB0141000	POLY BAG	1
3	MAPB0110800	POLY BAG	1	7	MASN0210830	SNOW PAD "L,R"	2
4	MOWT0147110	WARRANTY CARD	1	8	MAGB0038130	GIFT BOX	1

U701 (TL494CN) P.W.M IC

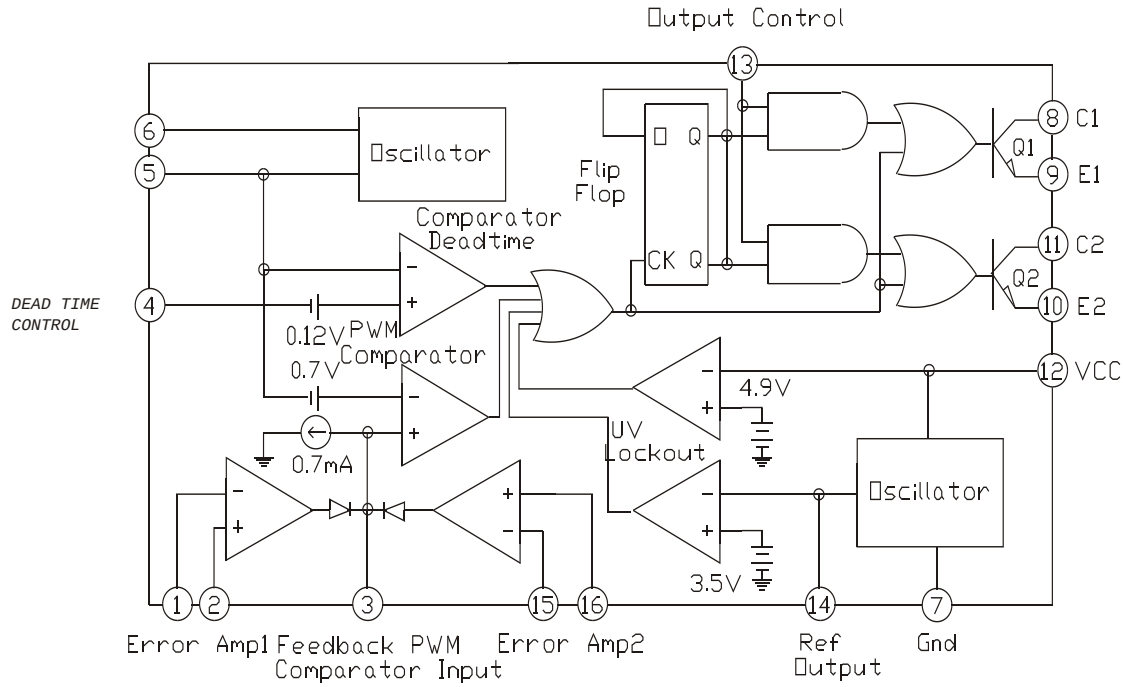

U101,102 (KIA4559P) - DUAL OP AMP
U111,702 (KIA393P)

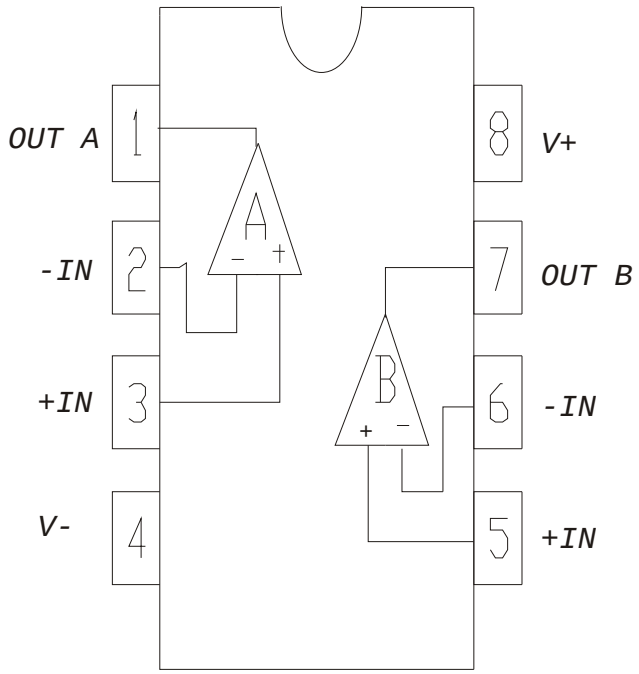

U103,104 (TL074CN)

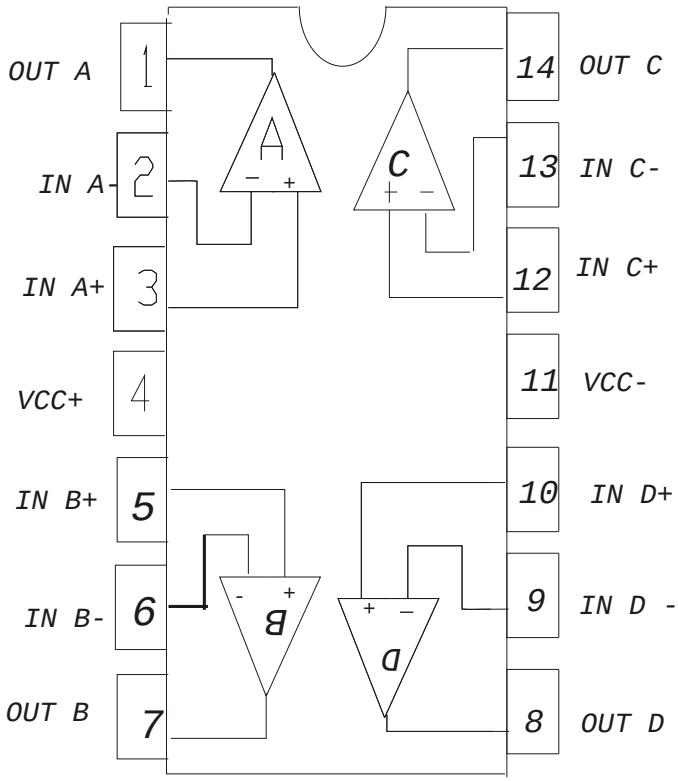

11

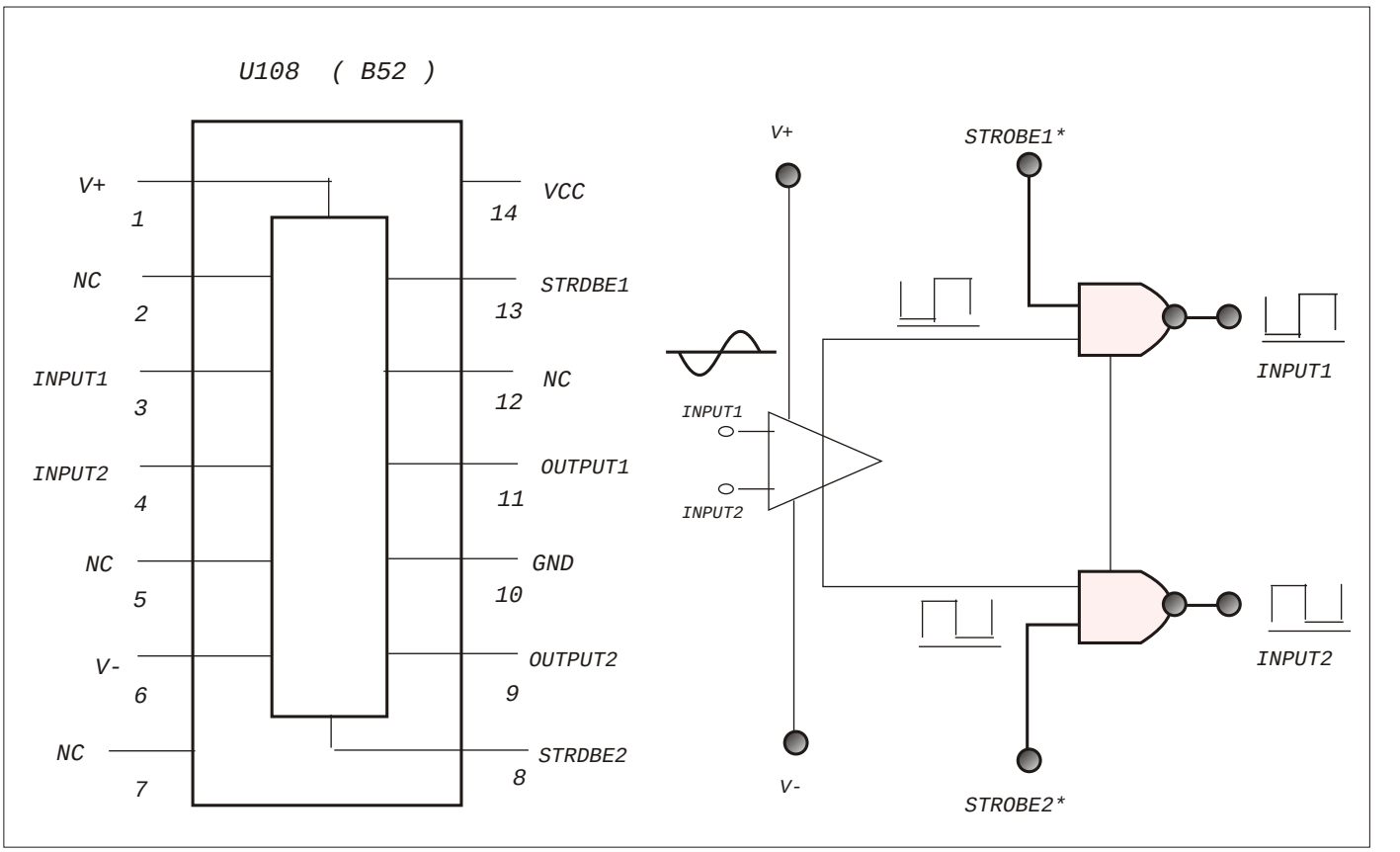
U108 (B52)
V+ 1
NC 2
INPUT1 3
INPUT2 4
NC 5
V- 6
NC 7
VCC 14
STRDBE1 13
NC 12
OUTPUT1 11
GND 10
OUTPUT2 9
STRDBE2 8
V+
STROBE1*
INPUT1
INPUT2
INPUT1
INPUT2
V-
STROBE2*

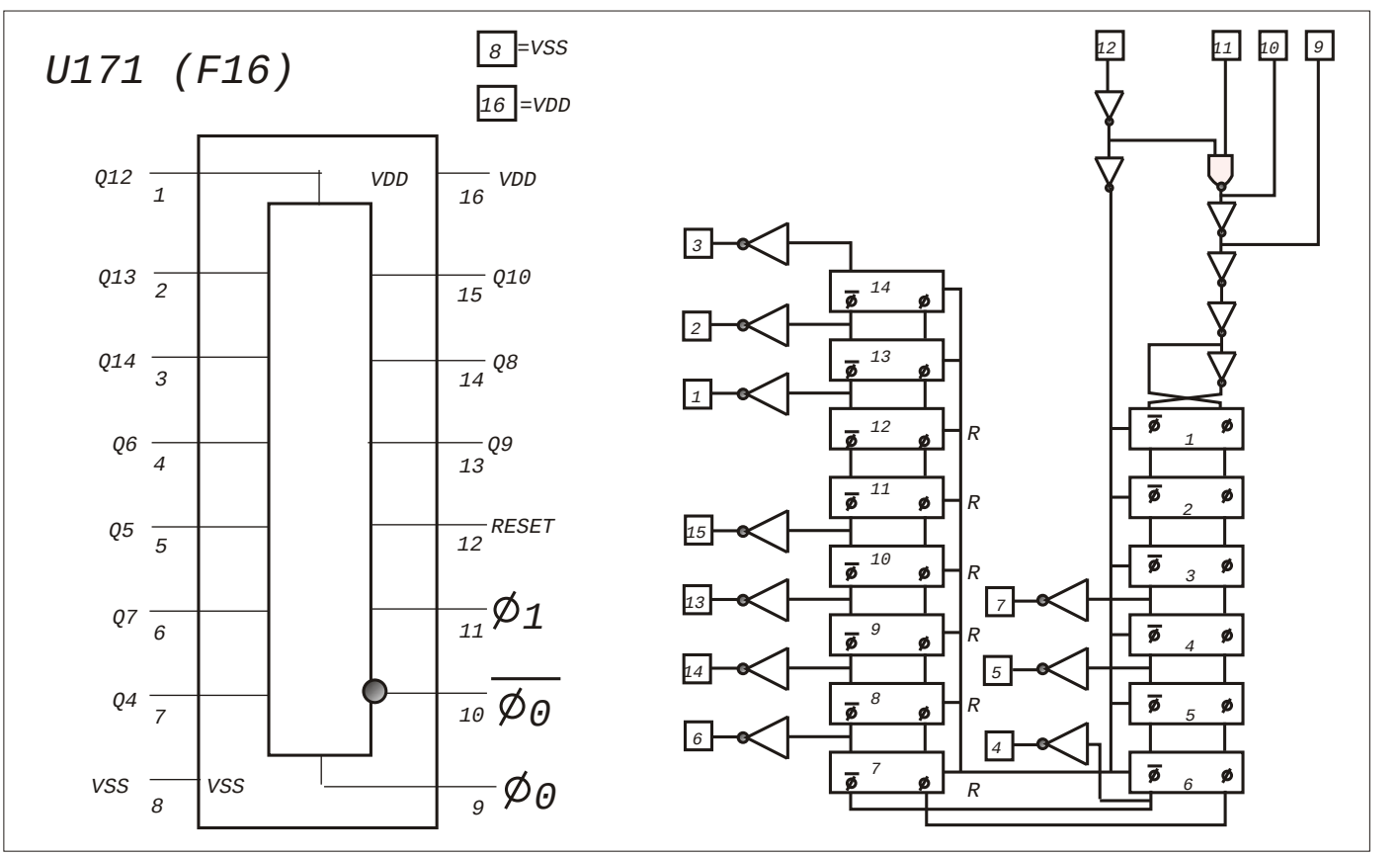
U171 (F16)
8 =VSS
16 =VDD
Q12 1
Q13 2
Q14 3
Q6 4
Q5 5
Q7 6
Q4 7
VSS 8
VDD
VSS
VDD 16
Q10 15
Q8 14
Q9 13
RESET 12
Ø1 11
Ø0 10
Ø0 9
R

Transistor Diagrams

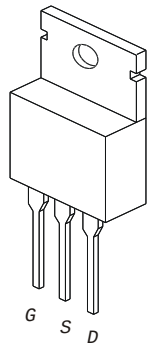

* IRF540 *
Q230,231,330,331

* IRF9540 *
Q210,211,212,310
Q311,312

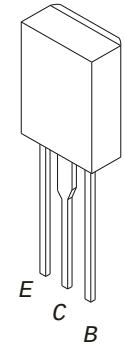

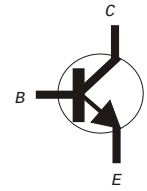

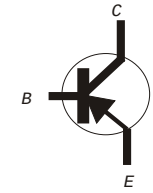

* KTC1027Y *
Q102,401

* KTA1023Y *
Q103,402,403,701

* D600K *
Q202,223,302,323

* B631K *
Q203,222,303,322

* 2SC3503 *
Q201,301

* 2SA1381 *
Q221,321

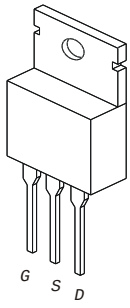

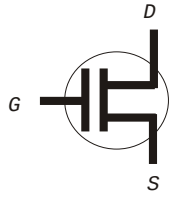

* IRFZ44 *
Q742,743,744
Q,752,753,754

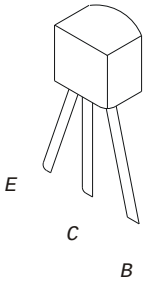

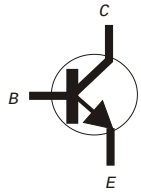

* KTC3198GR *
Q101,501,502,504,505
Q507,702,704,705,706

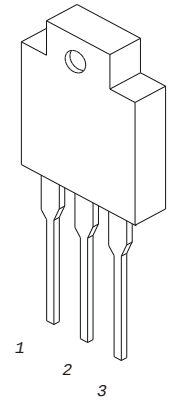

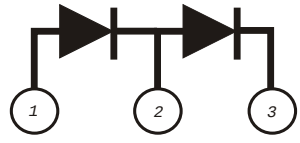

* ESC25M-02D *
D761,762

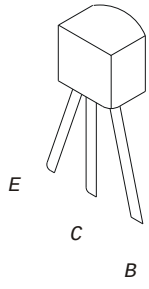

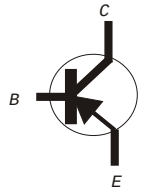

* KTA 1266GR *
Q506,703,741,751

BP-600.1 Mechanical Exploded View

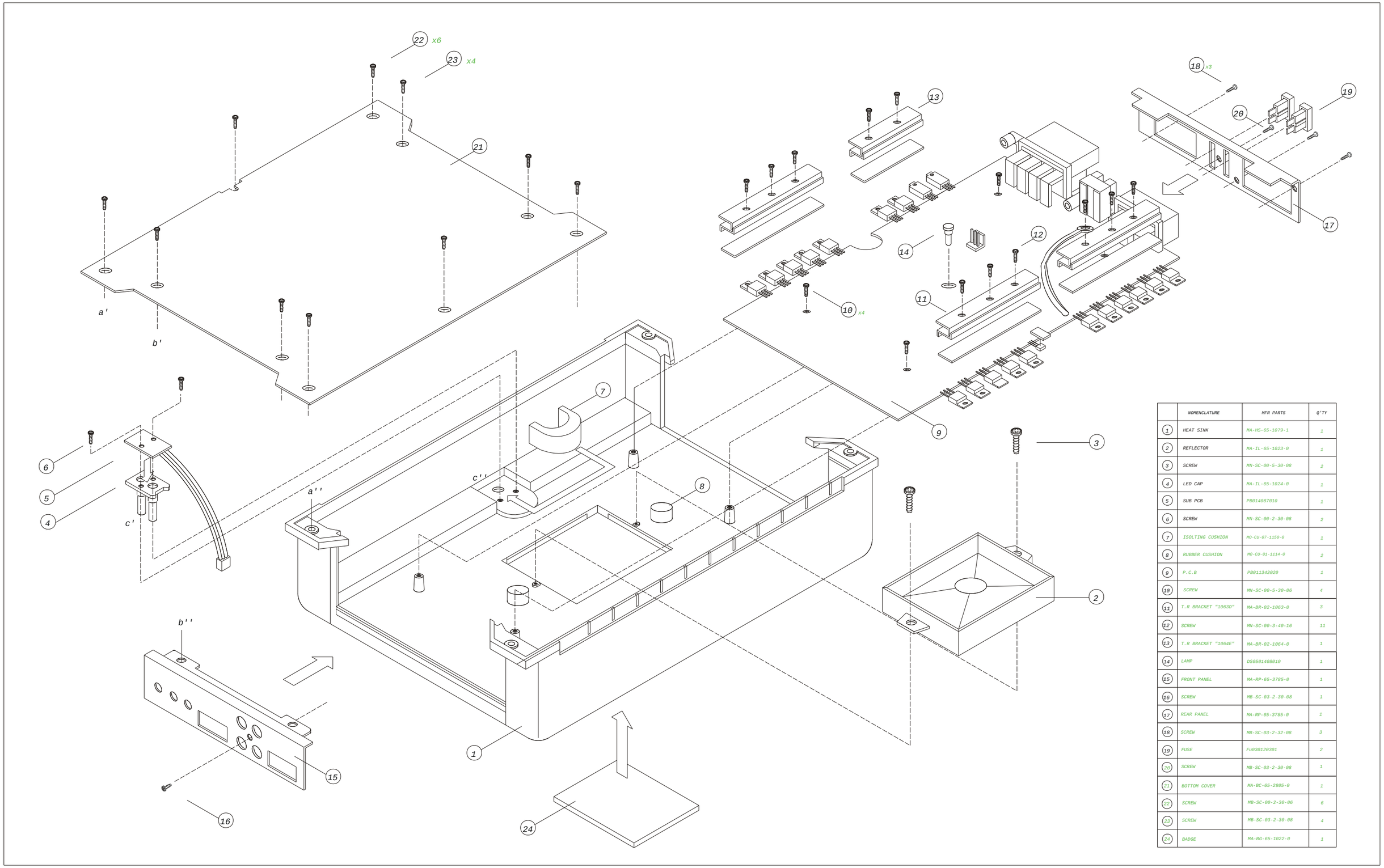

	NOMENCLATURE	MFR PARTS	Q'TY
1	HEAT SINK	MA-HS-65-1079-1	1
2	REFLECTOR	MA-IL-65-1023-0	1
3	SCREW	MN-SC-00-5-30-08	2
4	LED CAP	MA-IL-65-1024-0	1
5	SUB PCB	PB014087010	1
6	SCREW	MN-SC-00-2-30-08	2
7	ISOLTING CUSHION	MO-CU-07-1150-0	1
8	RUBBER CUSHION	MO-CU-01-1114-0	2
9	P.C.B	PB011343020	1
10	SCREW	MN-SC-00-5-30-06	4
11	T.R BRACKET "1063D"	MA-BR-02-1063-0	3
12	SCREW	MN-SC-00-3-40-16	11
13	T.R BRACKET "1064E"	MA-BR-02-1064-0	1
14	LAMP	DS05014008010	1
15	FRONT PANEL	MA-RP-65-3785-0	1
16	SCREW	MB-SC-03-2-30-08	1
17	REAR PANEL	MA-RP-65-3785-0	1
18	SCREW	MB-SC-03-2-32-08	3
19	FUSE	Fu030120301	2
20	SCREW	MB-SC-03-2-30-08	1
21	BOTTOM COVER	MA-BC-65-2805-0	1
22	SCREW	MB-SC-00-2-30-06	6
23	SCREW	MB-SC-03-2-30-08	4
24	BADGE	MA-BG-65-1022-0	1

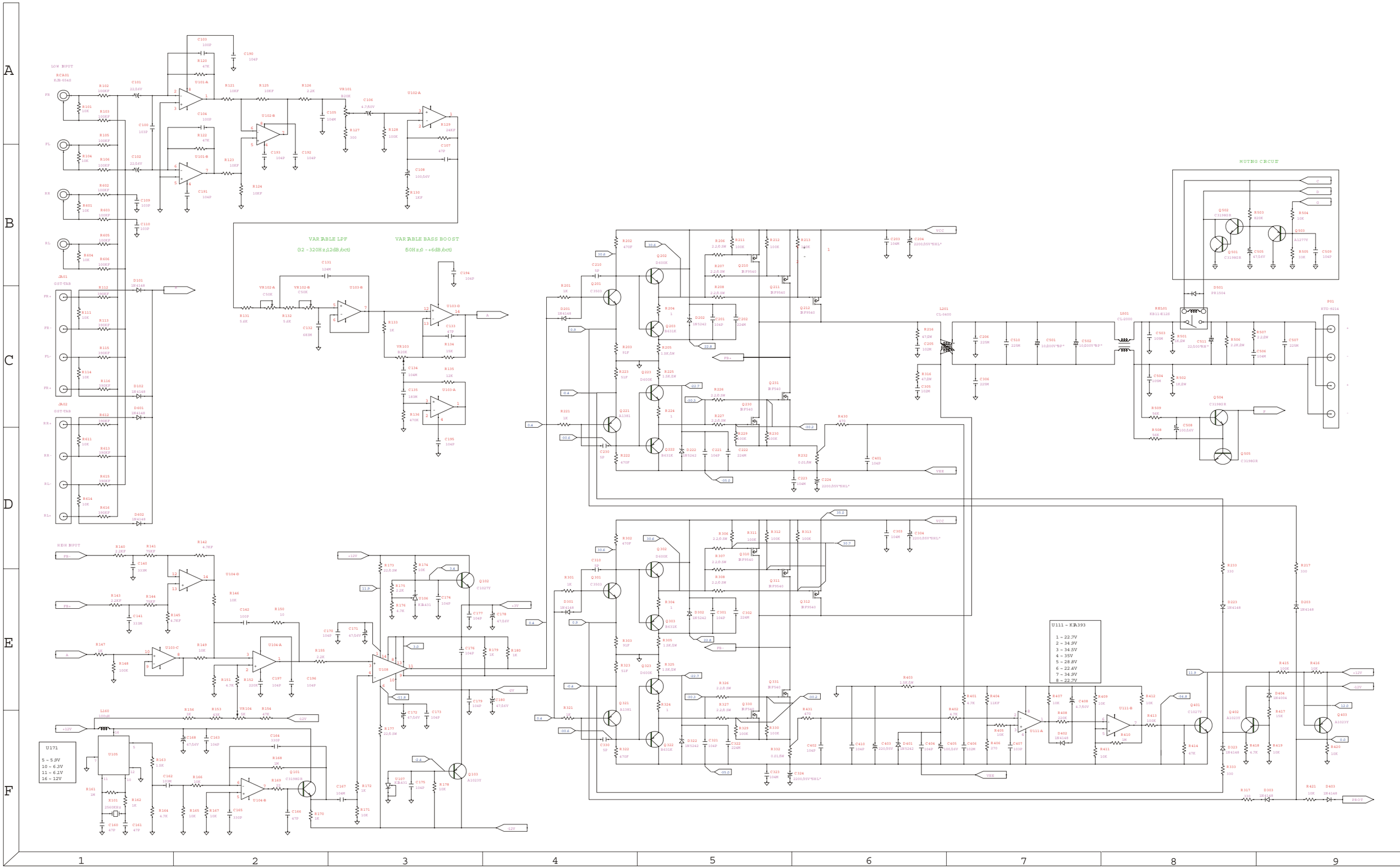
LOW INPUT
HIGH INPUT
VARIABLE LPF
(32-320Hz,12dB/oct)
VARIABLE BASS BOOST
(50Hz,0 - +6dB/oct)
MUTING CIRCUIT
U111 - KA393
1 - 22.7V
2 - 34.9V
3 - 34.5V
4 - 35V
5 - 28.8V
6 - 22.4V
7 - 34.9V
8 - 22.7V
U171
5 - 5.9V
10 - 6.3V
11 - 6.1V
16 - 12V

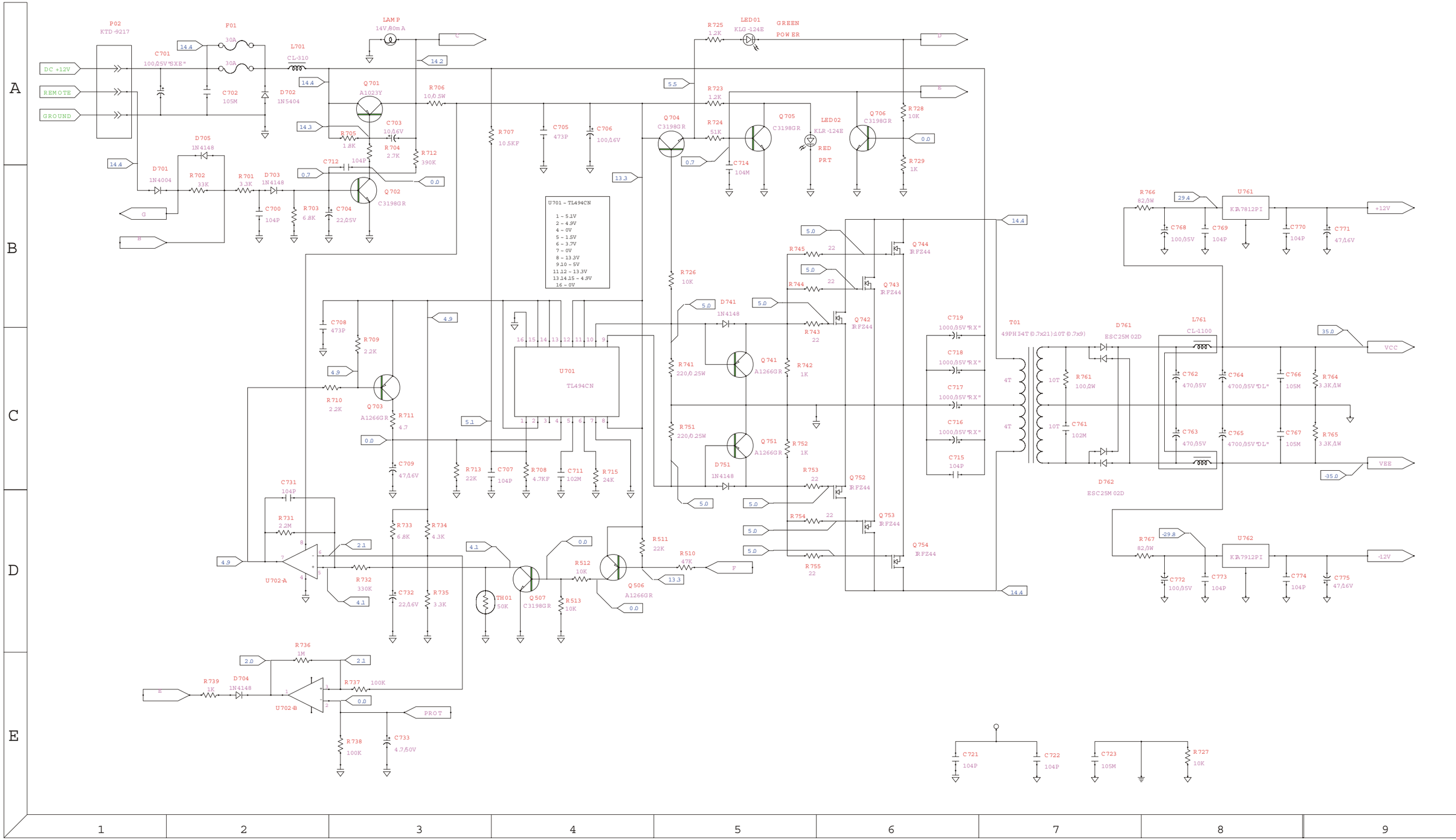
P02
KTD-9217
DC +12V
REMOTE
GROUND
F01
30A
30A
C701
100/25V "SXE"
C702
105M
L701
CL-310
D702
1N5404
LAMP
14V/80mA
Q701
A1023Y
R706
10/0.5W
C703
10/16V
R705
1.8K
R704
2.7K
R712
390K
C712
104P
Q702
C3198GR
D705
1N4148
D701
1N4004
R702
33K
R701
3.3K
D703
1N4148
C700
104P
R703
6.8K
C704
22/25V
R707
10.5KF
C705
473P
C706
100/16V
Q704
C3198GR
R725
1.2K
LED01
KLG-124E
GREEN
POWER
R723
1.2K
R724
51K
Q705
C3198GR
LED02
KLR-124E
RED
PRT
Q706
C3198GR
R728
10K
R729
1K
C714
104M
U701 - TL494CN
1 - 5.1V
2 - 4.9V
4 - 0V
5 - 1.5V
6 - 3.7V
7 - 0V
8 - 13.3V
9 10 - 5V
11 12 - 13.3V
13 14 15 - 4.5V
16 - 0V
R726
10K
D741
1N4148
R741
220/0.25W
Q741
A1266GR
R742
1K
R743
22
Q742
IRFZ44
R744
22
Q743
IRFZ44
R745
22
Q744
IRFZ44
R751
220/0.25W
Q751
A1266GR
R752
1K
D751
1N4148
R753
22
Q752
IRFZ44
R754
22
Q753
IRFZ44
R755
22
Q754
IRFZ44
C719
1000/35V "RX"
C718
1000/35V "RX"
C717
1000/35V "RX"
C716
1000/35V "RX"
C715
104P
T01
49PHI4T (0.7x21)10T (0.7x9)
4T
10T
R761
100/2W
10T
C761
102M
D761
ESC25M02D
D762
ESC25M02D
L761
CL-1100
C762
470/35V
C764
4700/35V "DL"
C766
105M
R764
3.3K/1W
C763
470/35V
C765
4700/35V "DL"
C767
105M
R765
3.3K/1W
VCC
VEE
R766
82/3W
U761
KIA7812PI
C768
100/35V
C769
104P
C770
104P
C771
47/16V
+12V
R767
82/3W
U762
KIA7912PI
C772
100/35V
C773
104P
C774
104P
C775
47/16V
-12V
C708
473P
R709
2.2K
R710
2.2K
Q703
A1266GR
R711
4.7
C709
47/16V
R713
22K
C707
104P
R708
4.7KF
C711
102M
R715
24K
C731
104P
R731
2.2M
U702-A
R732
330K
R733
6.8K
R734
4.3K
C732
22/16V
R735
3.3K
TH01
50K
Q507
C3198GR
R512
10K
R513
10K
Q506
A1266GR
R511
22K
R510
47K
R736
1M
R739
1K
D704
1N4148
U702-B
R737
100K
PROT
R738
100K
C733
4.7/50V
C721
104P
C722
104P
C723
105M
R727
10K