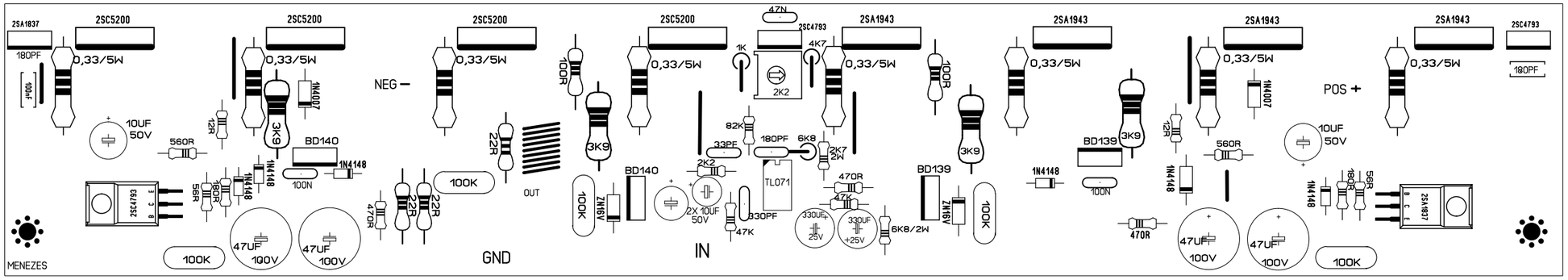
2SA1837
2SC5200
180PF
100nF
0,33/5W
10UF
50V
560R
12R
3K9
1N4007
BD140
1N4148
100N
56R
180R
2SC4732
47UF
100V
100K
22R
470R
NEG −
GND
OUT
IN
POS +
MENEZES
47N
2SC4793
1K
2K2
4K7
82K
33PF
180PF
6K8
2K7
2W
TL071
470R
47K
330PF
2X 10UF
50V
330UF
25V
330UF
+25V
6K8/2W
ZN16V
BD139
2SA1943
2SC4793
MENEZES