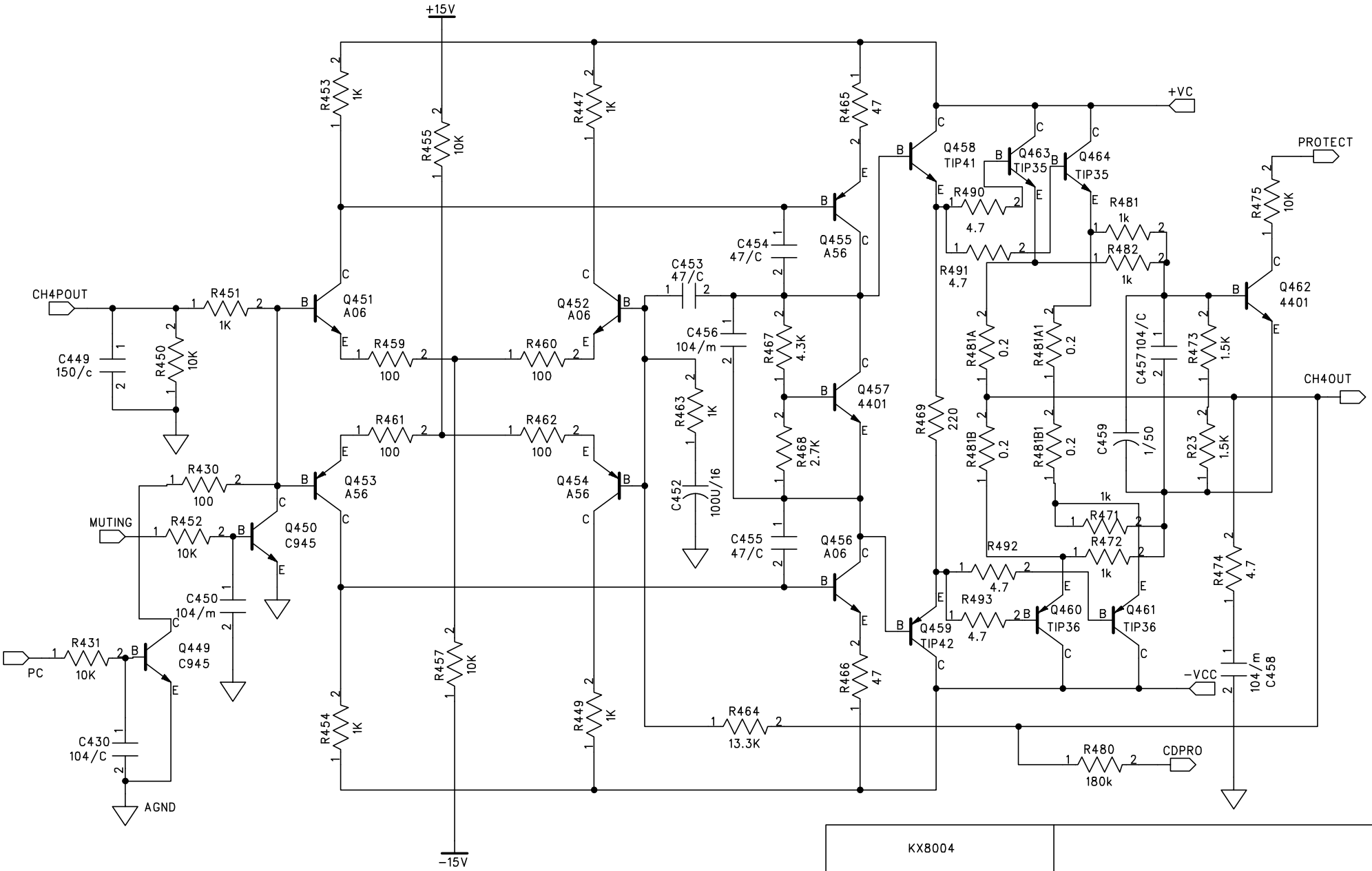

KX8004				
DRAWN: Z F	DATE: 2001.11.20	DWG NO: PT-1-K0191-11		
CHECKED: Z F	DATE: 2001.11.20			
APPROVED:	DATE:		SCALE: 1:1	REV: 1.0