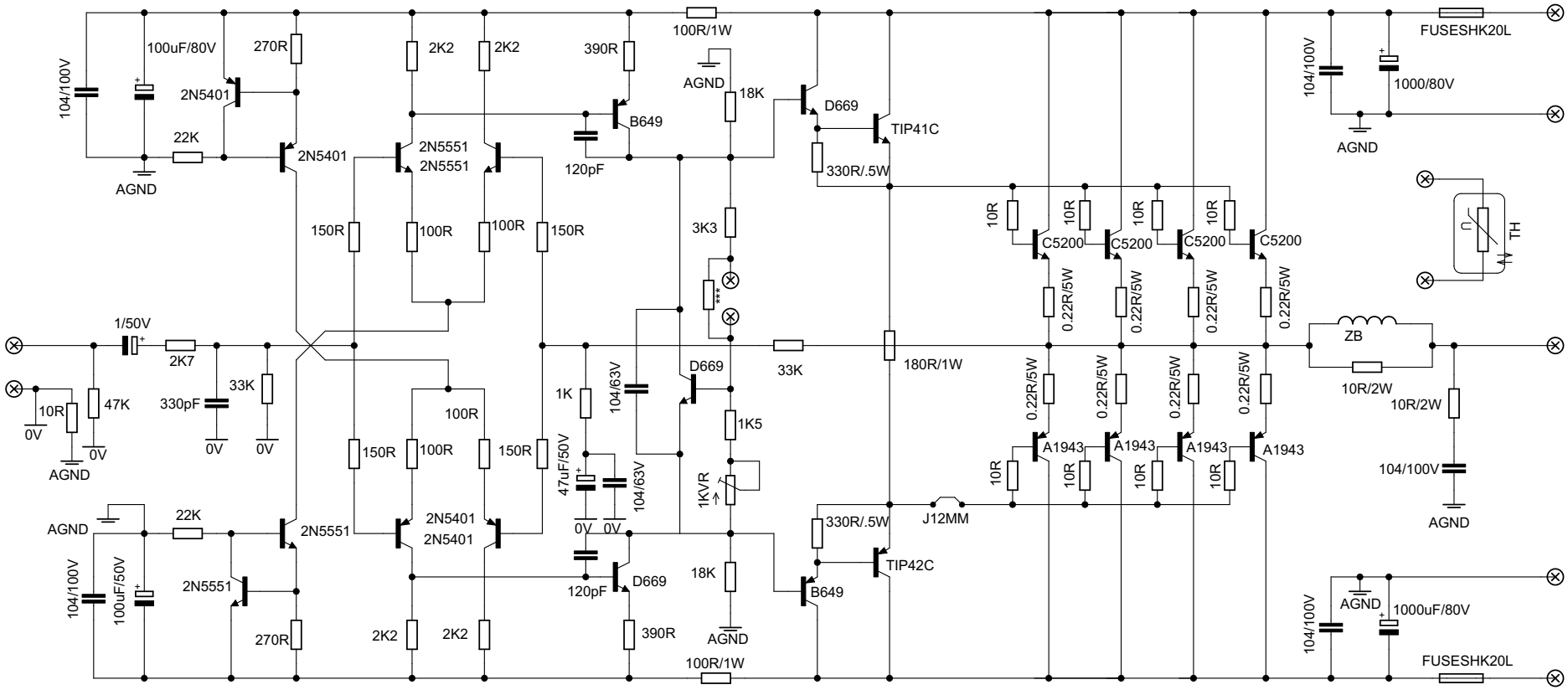

400W Audio Power Amplifier By: Melody

(ACR) Pinoy_Electronics / 576Pinoy_Tech / Rev. Feb 20, 2012