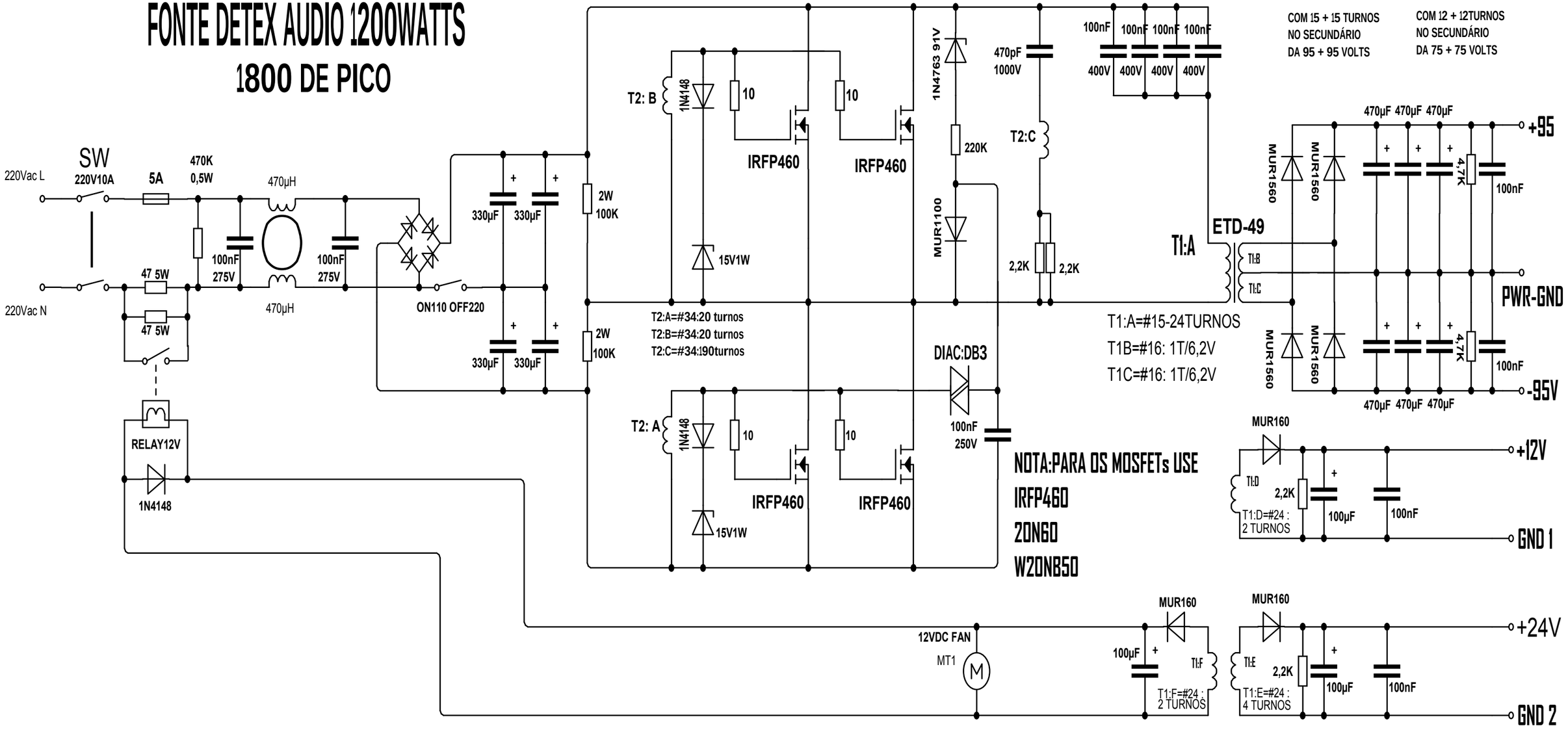FONTE DETEX AUDIO 1200WATTS
1800 DE PICO