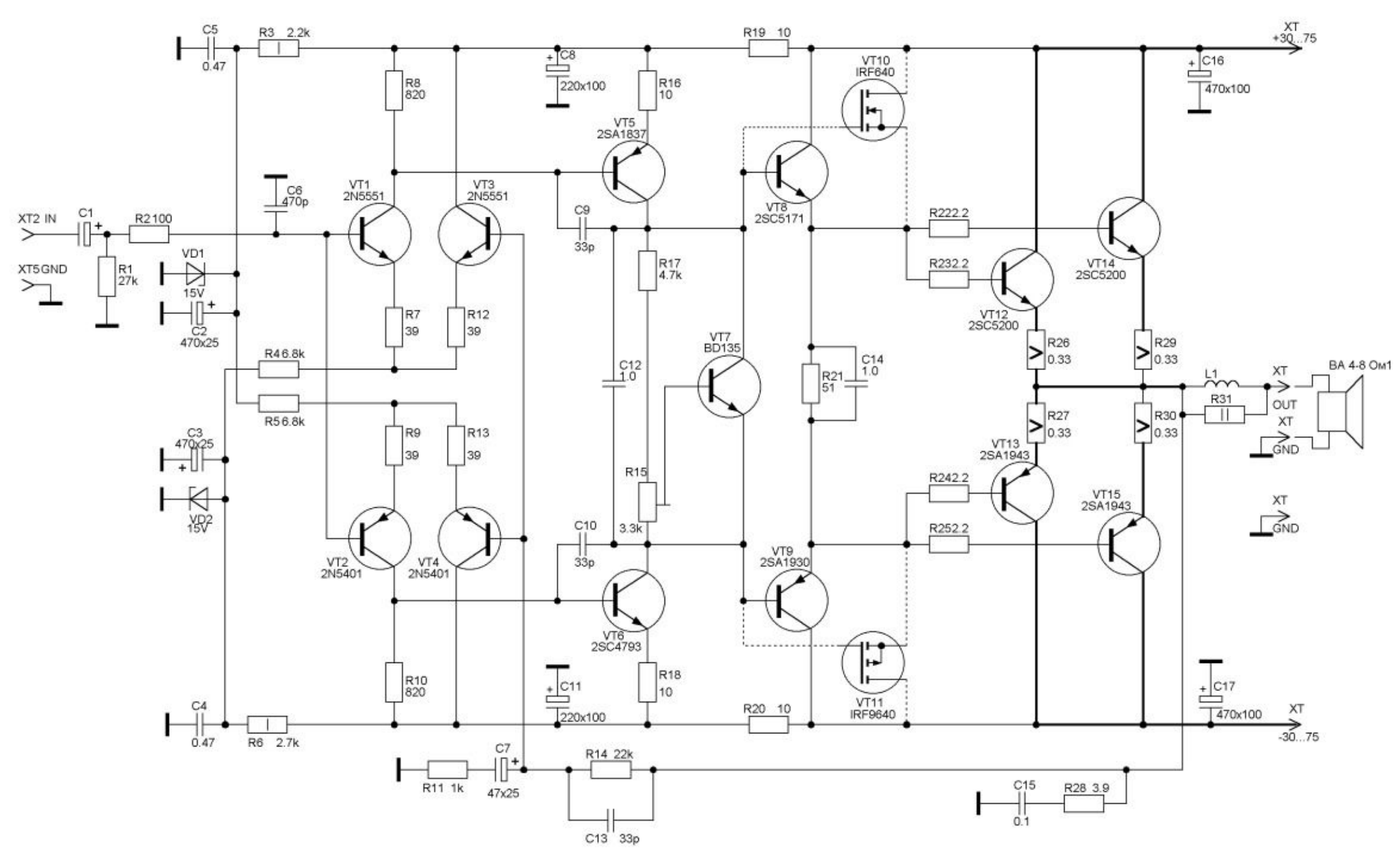
XT2 IN
XT5GND
C1
R1 27k
R2 100
VD1 15V
C2 470x25
C3 470x25
VD2 15V
C4 0.47
R6 2.7k
C5 0.47
R3 2.2k
C6 470p
R4 6.8k
R5 6.8k
R8 820
R7 39
R12 39
R9 39
R13 39
R10 820
VT1 2N5551
VT3 2N5551
VT2 2N5401
VT4 2N5401
C8 220x100
C9 33p
C10 33p
C11 220x100
R16 10
R17 4.7k
R15 3.3k
R18 10
C12 1.0
VT5 2SA1837
VT6 2SC4793
VT7 BD135
R19 10
R20 10
VT8 2SC5171
VT9 2SA1930
VT10 IRF640
VT11 IRF9640
R21 51
C14 1.0
R22 2.2
R23 2.2
R24 2.2
R25 2.2
VT12 2SC5200
VT13 2SA1943
VT14 2SC5200
VT15 2SA1943
R26 0.33
R27 0.33
R29 0.33
R30 0.33
C16 470x100
C17 470x100
XT +30...75
XT -30...75
L1
R31
XT OUT
XT GND
BA 4-8 Ом1
C7 47x25
R11 1k
R14 22k
C13 33p
C15 0.1
R28 3.9