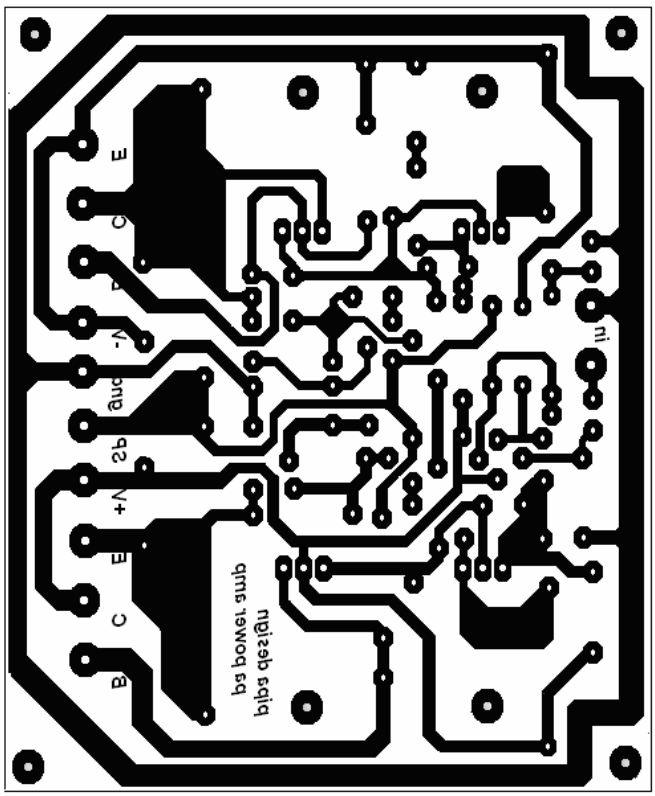
E
C
B
-V
aud
+V
E
C
B
in
by bomet gmb
nigeb gaig

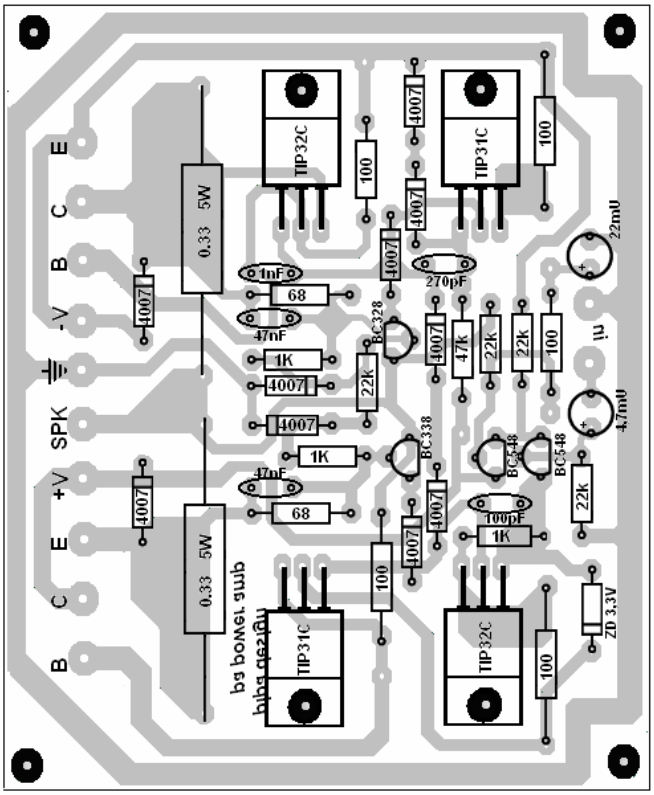
E
C
B
-V
SPK
+V
E
C
B
TIP32C
TIP31C
TIP31C
TIP32C
0,33 5W
0,33 5W
4007
100
1nF
68
47nF
1K
22K
BC328
BC338
270pF
47k
22k
BC548
100pF
Zd 3,3V
22mU
4,7mU
in
by bomet gmb
nigeb gaig

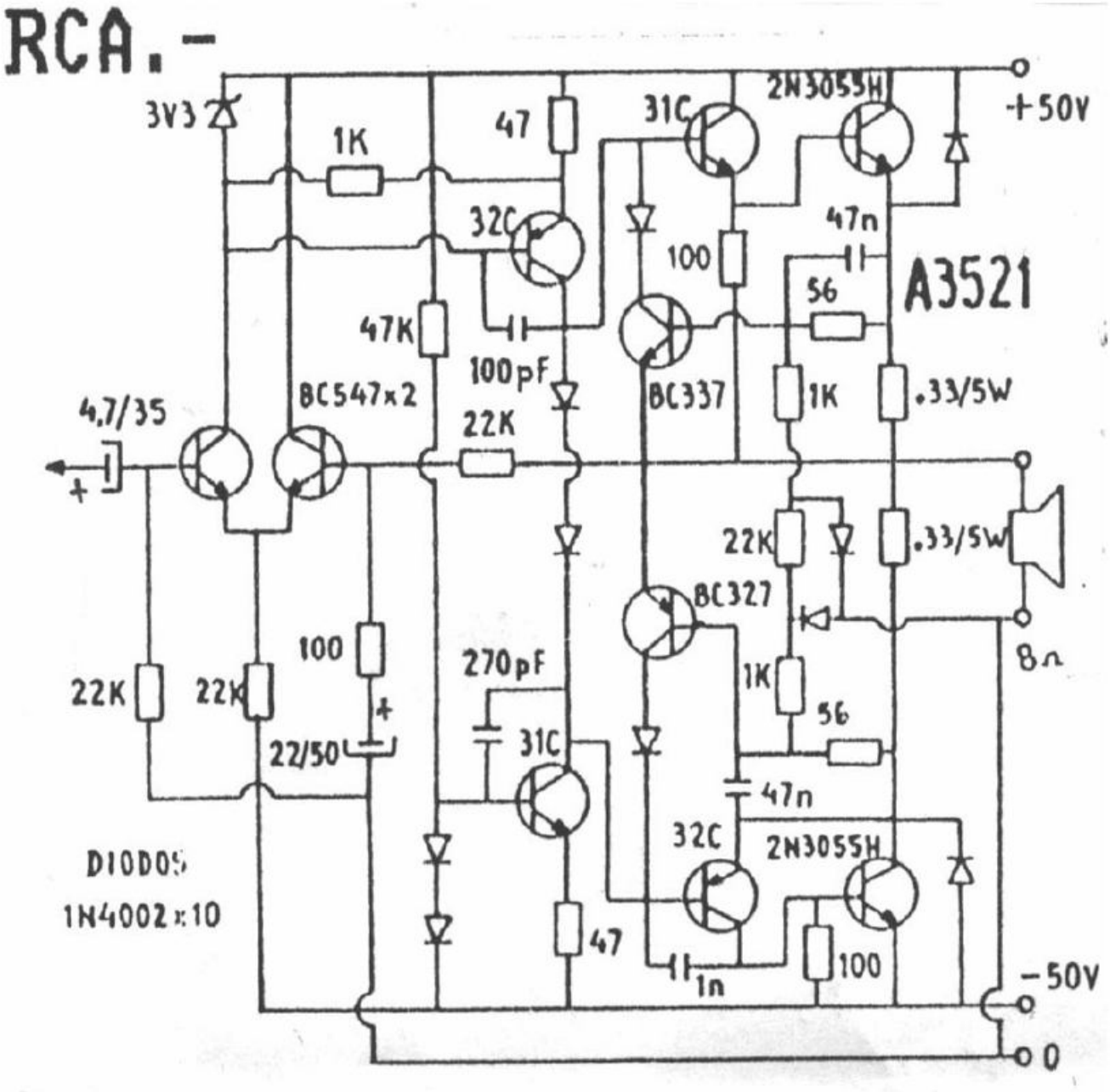
RCA.-
3V3
1K
47
31C
2N3055H
+50V
32C
100
47n
A3521
56
47K
100pF
BC337
1K
.33/5W
4,7/35
BC547x2
22K
+
22K
.33/5W
BC327
8Ω
100
270pF
1K
22K
22K
56
22/50
31C
47n
32C
2N3055H
DIODOS
1N4002 x 10
47
1n
100
-50V
0