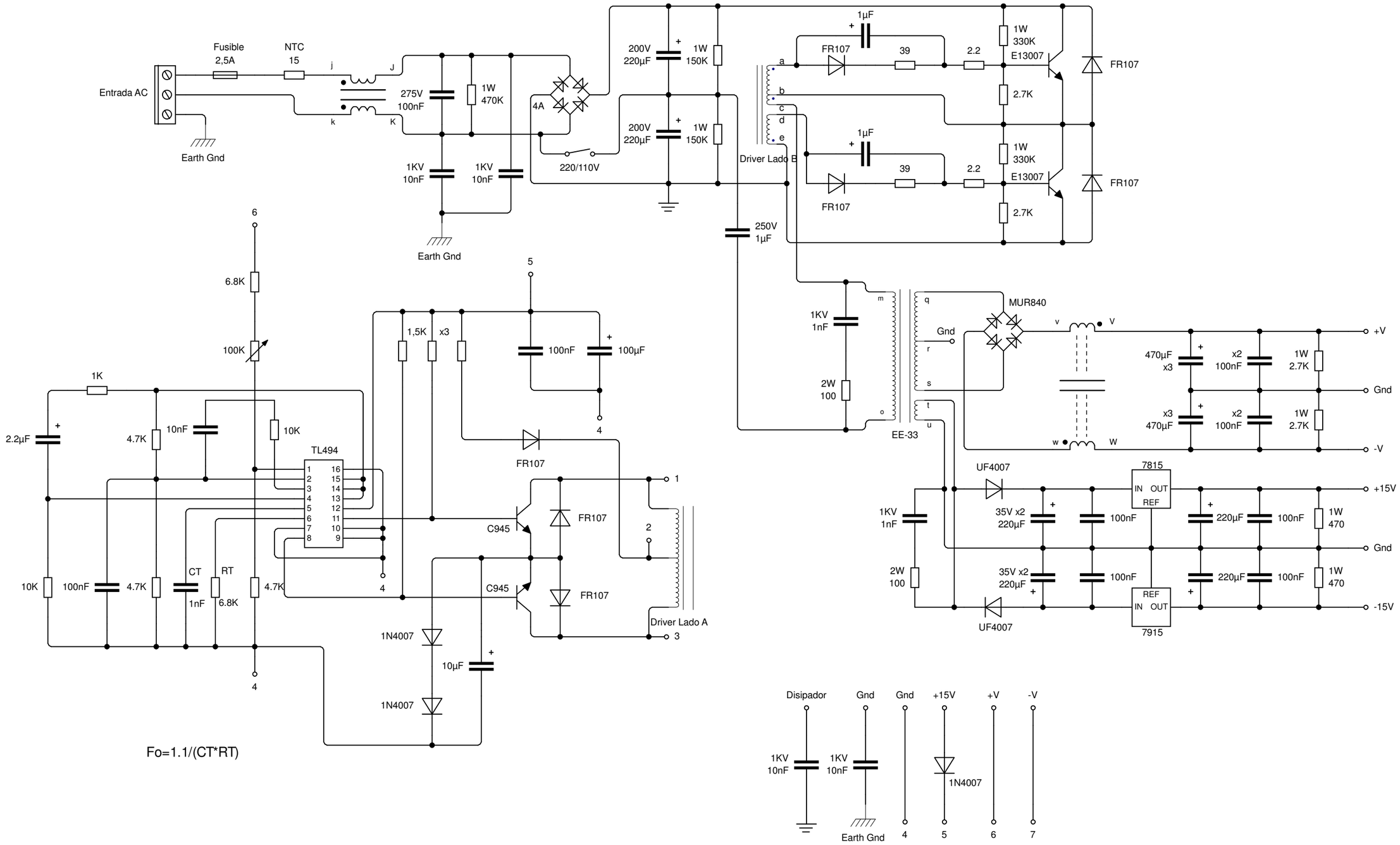

SMPS Half Bridge Compacta - Mariano Nicolau