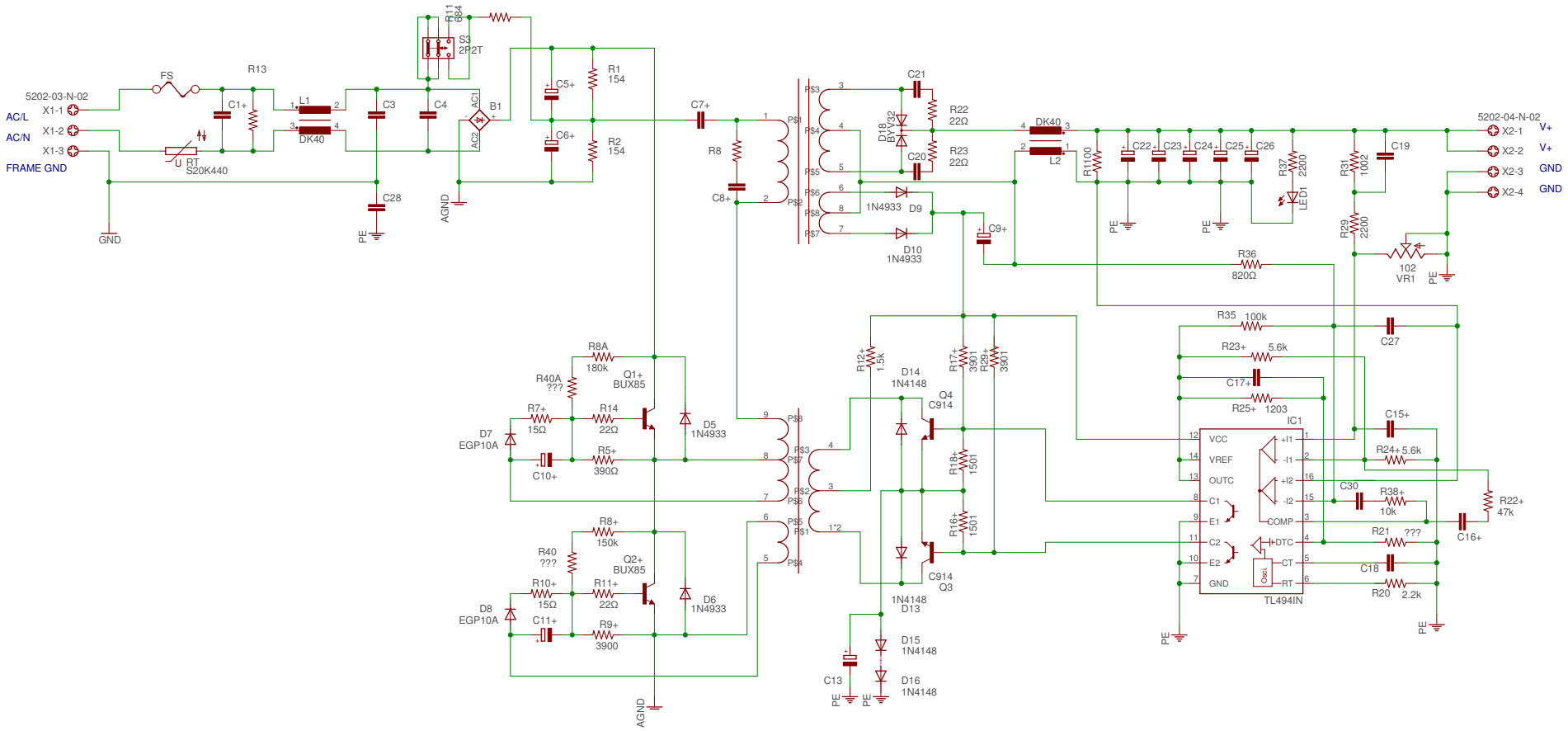

24/5/18 3:46 P. M. f=0.65 /home/mcrven/eagle-8.3.0/SMPS_12V_12.5A.sch (Sheet: 1/1)